Belshaw

Thermoglaze

Model TG 50

Operator's Manual

For

Serial Number W04060001 on

Belshaw Bros., Inc.

1750 22nd Avenue South

Seattle, WA 98144-4590

Phone: (206) 322-5474 • Fax: (206) 322-5425

Toll Free: 1-800-578-2547

Email: service@belshaw.com • http://www.belshaw.com

Congratulations on buying a new Thermoglaze from Belshaw Bros., Inc. Please inspect the unit carefully for damage or missing pieces immediately after receiving your system. Belshaw cannot pay for shipping damage, because the freight company has accepted the machine from Belshaw in good condition, and is responsible for its safe delivery.

For your protection, each crate should be inspected before signing the Bill of Lading to report any visible damage caused by the trucker in transit, and account for the number of crates.

EQUIPMENT RECORD

Please provide the information below when you correspond with us about your machine.

Purchased by _____

Installed by _____

Date of Installation _____

Model number _____

Serial number _____

0805

MN-1716EN

Belshaw Bros., Inc.

1750 22nd Avenue South

Seattle, WA 98144-4590

Phone: (206) 322-5474 • Fax: (206) 322-5425

Toll Free: 1-800-578-2547

Email: service@belshaw.com • http://www.belshaw.com

Contents

Preface

The operator of the Thermoglaze is expected to behave safely, read this manual before operation, and follow its instructions and warnings.

Study the instructions and warnings in this manual carefully before operating the equipment. A thorough understanding of how to install, maintain, and safely operate the Thermoglaze will prevent production delays and injuries. Prior operation of the equipment before reading and understanding the instructions in the manual will void the warranties of the equipment.

To use the Thermoglaze safely, heed the following warnings and all other warnings that appear in this manual:

- To avoid damaging the Thermoglaze, never use force to assemble, disassemble, operate, clean, or maintain it.

1 Unloading and Uncrating

DO NOT LIFT EXCESSIVE WEIGHT

Once the crate has been delivered, immediately take the covers off the crate and inspect for hidden damage. If damage is found, please see the above information to make a damage claim to the shipping company. After inspection, cut the banding and remove any other restrains from the Thermoglaze unit. Remove the banding and other packing material from the Thermolizer unit. Roll the Thermolizer, carefully, off the skid first and move it near the area where it will be assembled. Roll the Thermoglaze unit, carefully, off the skid and move it near the area where it will be assembled.

Do not connect the Thermoglaze or the Thermolizer to electrical power before completing the assembly and placement of the products.

Figure 1-1 shows the system in the crate ready to be unpacked. The cartons under the Thermoglaze contain the glaze trough and oven guard. See Section 4 to assemble the unit. The carton in the Thermolizer contains the doors and other interior parts. See Thermolizer manual for assembly instructions.

The Thermoglaze system has been designed for quick assembly and installation. Within a few minutes of receiving the system, the installer can have the Thermoglaze ready to make donuts if the electrical connections are properly installed and inspected by the prevailing local authorities.

Figure 1-1

Identification 2

This information is key to identification for service or ordering parts on the ThermoGlaze. When servicing the equipment, please have the Model and serial number so the technician can order the correct parts for you. To identify which Thermoglaze system you have, please use the following model number key:

THERMOGLAZE DESCRIPTION KEY

Model No: - Doz/hr: - Glaze Pump: Opt. Items: - Voltage: - Freq: - Phase: -

TG	**50**	**G = Gear Pump**	**V = End Cover -50**	**208**	**50**	**1**
	25	**L = Lift Pump**	**M = Mono -50**	**220/240**	**60**	**3**
		N = No Pump	**A = RF Oper.**	**400/230**		**3 w/N**
			B = LB Oper.	**415/240**		
Location:			**C = LF Oper.**			
			D = RB Oper.			
C = CE/Export			**T = LB Oper/SPL w/**			
D = Domestic/Nema			(thermolizer cabinet)			
B = Export/Non-CE						
W = Domestic/Pin/Sleeve						
E = Aust/NZ						

Note: TG-50 is RF/LB Operate only, without Thermolizer - Screen 17” x 25”
TG-25 includes built in Thermolizer for 12 ½” x 17” Screen

Part No.	**Description Key**		**Drawings**
22080	**OBS USE 22113, TG-25**	*JR.*	**TJ-2004, TJ-4000** w/120V
22081	**OBS USE 22114, TG-25**	*JR.*	**TJ-2006, TJ-4000** w/120V
22082	**OBS USE 22115, TG-25**	*JR.*	**TJ-2005, TJ-4000** w/120V
22083	**OBS USE 22116, TG-25**	*JR.*	**TJ-2007, TJ-4000** w/120V
22113	**TG-25-GA-208-60-1-D**	*JR.*	**TJ-2004, TJ-4002**
22114	**TG-25-GB-208-60-1-D**	*JR.*	**TJ-2006, TJ-4002**
22115	**TG-25-GC-208-60-1-D**	*JR.*	**TJ-2005, TJ-4002**
22116	**TG-25-GD-208-60-1-D**	*JR.*	**TJ-2007, TJ-4002**
22117	**TG-25-GA-220/240-60-1-D**	*JR.*	**TJ-2004, TJ-4002**
22118	**TG-25-GB-220/240-60-1-D**	*JR.*	**TJ-2006, TJ-4002**
22119	**TG-25-GC-220/240-60-1-D**	*JR.*	**TJ-2005, TJ-4002**

Part No.	Description Key		Drawings
22120	**TG-25-GD-220/240-60-1-D**	*JR.*	**TJ-2007, TJ-4002**
22231	**TG-25-GB-415-50-3w/N-C**	*JR*	**TJ-2006, TJ-4004** (415/240V)
22247	**TG-25-GB-415-50-3w/N-E**	*RVO*	**TJ-2012, TJ-4005** (415/240V)
22010	**TG-50-G-208-60-1-W**	*STD*	**TNG-2011, TNG-4008**
22054	**TG-50-GV-208-60-1-D**	*STD*	**TNG-2011, TNG-4008**
22011	**TG-50-GV-220/240-60-1-D**	*STD*	**TNG-2011, TNG-4008**
22013	**TG-50-GV-400/230-50-3-C**	*STD*	**TNG-2011, TNG-4012**
22067	**TG-50-GM-400/230-50-3-C**	*SPL*	**TNG-2012, TNG-4012**
22251	**TG-25-GT-208-60-1-D**	*SPL*	**TJ-2013, TJ-4002**

Optional Line Items:

SL200-0004	**Glazing Screen - 17" x 25" – TG-50**
TJ-0001	**Glazing Screen – 12 ½" x 17" – TG-25**
TJ-1012	**Front Shield Kit – TG-25**
SK-1257	**Spare Parts Kit – TG-50 (included)**
SK-1258	**Service Kit – TG-50** (208-220/240V-60H-1P-DOM)
SK-1280	**Spare Parts Kit – TG-25 (included)**
SK-1281	**Service Kit – TG-25** (208-220/240V-60H-1P-DOM)
SK-1281CE	**Service Kit – TG-25** (415/240V-50H-3P-CE)
SK-1314	**Service Kit – TG-50** (400/230V-50H-3P-CE)
TNGG-1011	**Heater Assembly - Glaze Tank TG-50**
TZ-6 & TZ-17	**Thermolizer** (order service kits separate)
TNGG-0079	**Cover; Glaze Tank – TG-50 (included except 22010)**
TNGV-2004	**Oven Mod. Kit & Lincoln Oven Parts** (208V-60H-1P-DOM)
TNGV-2005	**Oven Mod. Kit & Lincoln Oven Parts** (240V-60H-1P-DOM)
TNGV-2009	**Oven Mod. Kit & Lincoln Oven Parts** (400/230V-50H-3P-CE)

08/19/05

Installation 3

WARNING

To avoid electrocuting yourself or damaging the Thermoglaze, never allow water, steam, cleaning solution, or other liquid to enter the electrical panels or connections

Electrical:

Model	Dimensions	Power Requirements
TG21586	88"L x 40W x 63"H	See data tag

Make sure that the power requirements of the Thermoglaze, shown on the data plate, match your power source.

Only plug in to power source that matches the required voltage and current for the Thermoglaze. (The Thermoglaze unit TG50 comes standard with a Hubbel 360P6W plug that needs a 360C6W socket or equivalent for electrical current.

Thermoglaze must be electrically grounded and connected in compliance with the National Electrical Code, ANSI-NFPA 70, and applicable municipal building codes.

Do not apply electrical power to the system until the assembly has been completed. See Section 4 for the assembly of the Thermoglaze.

Venting:

Local codes prevail. The authorities having jurisdiction are stated in NFPA 96-1994 regarding requirements for the Thermoglaze.

Building Layouts:

Specification sheets and AutoCAD drawings for use in developing architectural drawings can be provided by request. Please call your Belshaw Bros., Inc. representative for help in defining your requirements.

Assembly 4

Clean all parts with mild soap and water and let dry before assembly and applying electrical power to the equipment.

The Thermoglaze unit is design for ease of assembly and use. The system is crated in a manner so there are few pieces to put together once the Thermoglaze is in place for production.

After unpacking the system per the uncrating instructions, 2 items need to be placed on the Thermoglaze to finish assembly, the glaze trough and the heat shield. First, the Glaze trough slips into the 2 holes on either side of the drain tray with the waterfall headed toward the oven. See figure 4-1 and 4-4 for help setting the trough in place. After the trough is in place attach the glaze hose to the trough by pushing it in the hose mount in the center of the trough. Second is the Heat Shield over the oven portion of the Thermoglaze. Slip it over the oven using the handles provided until the guard locks over the back of the oven. See figure 4-1 for a photo of the location of the heat shield.

To help familiarize you with your Thermoglaze, please study the following photographs:

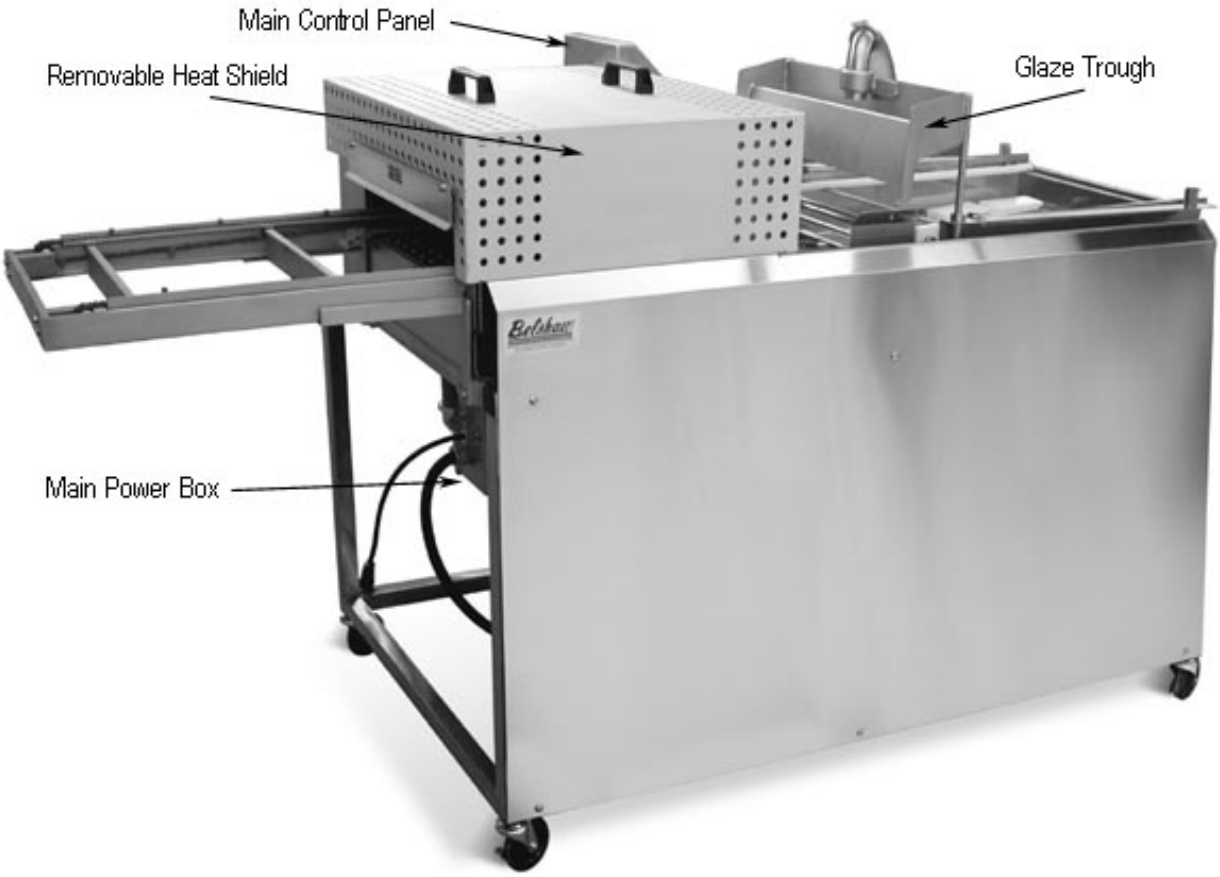

Figure 4-1 Front view:

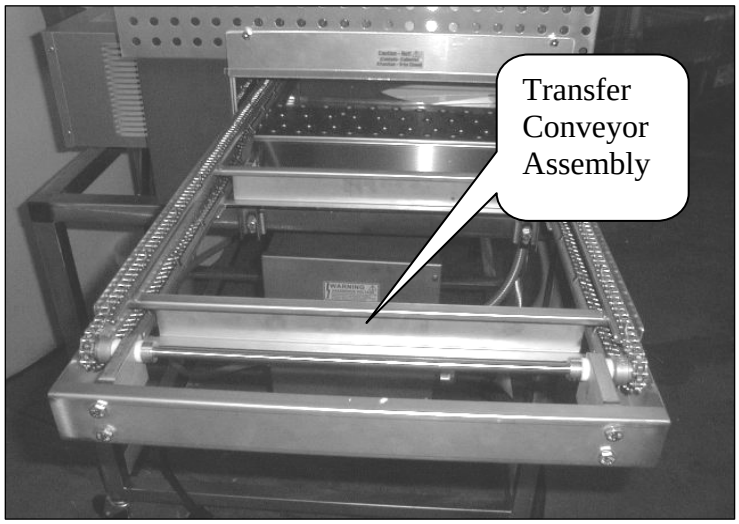

Figure 4-2 Infeed – Left hand view.

Figure 4-3 Swing away glaze trough. (Optional)

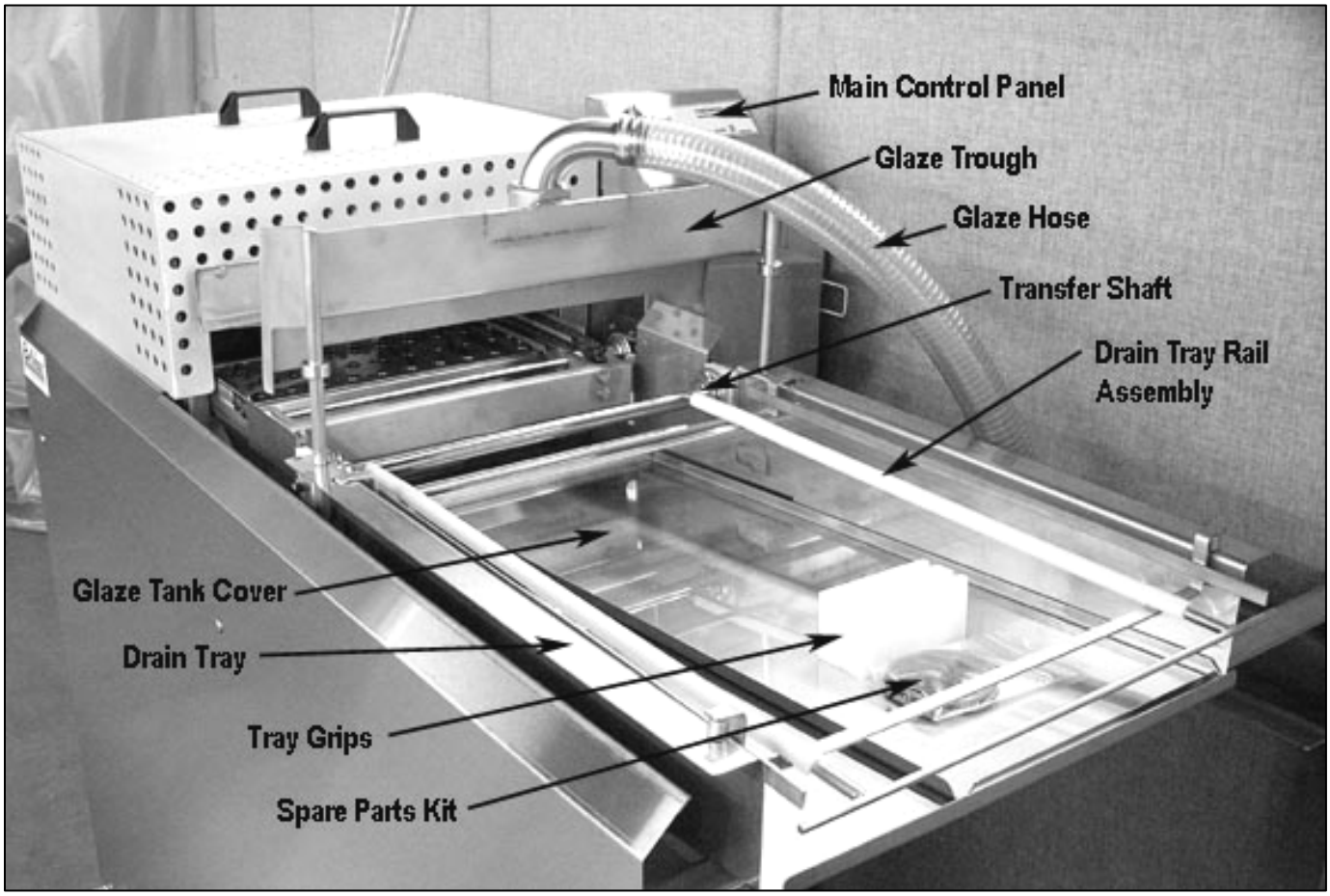

Figure 4-4 Right Hand View:

Figure 4-5 Control Panel View:

The Thermoglaze system consists of a Thermoglaze unit and the Thermolizer. They are placed in unison in the area located for the production of donuts. See Figure 4-6 for Thermoglaze system.

Figure 4-6 Thermoglaze System.

Operation 5

- Turn on main power switch and allow to heat to operating temperature. **(Note: conveyor will not move until the oven is up to operating temperature and the donut ready light is on. See Figure 5-1.)**

Figure 5-1. Oven Ready Light.

- Turn on the Thermolizer and heat for 30 minutes to allow it to reach operating temperature. See Thermolizer manual for more operating instructions.
- Load glaze reservoir with 40 pounds (one large bucket) of glaze and turn on the glaze pump.
- To swing the glaze trough back, turn off glaze pump, lift up on the mount slightly and rotate to the trough to the rear. (Optional Equipment) See Figure 4-3.

WARNING

Do not operate glazer without glaze or water in the pump. Doing so may cause permanent damage to the pump.

- After the donuts have been in the Thermolizer for at least 20 minutes (60 minutes for filled product), turn on glazer using the on switch located on the main control panel.
- After the donuts are thawed, place a screen of donuts from Thermolizer box to the infeed end of the Thermoglaze conveyor and allow the screen to travel through the oven and glazer. This takes approximately 3 minutes.
- When the screen of donuts is through the glazer and stopped forward travel, place the glazed product on a rack for cooling using the 2 delrin tray grips provided with the unit.

WARNING

To avoid burning yourself, never touch the Thermoglaze unit, conveyor, or interior of the oven while the machine is in use.

WARNING

Thoroughly clean and dry the floor if water or other materials are spilled. Materials spilled on the floor may cause serious injury and loss of life.

WARNING

Conveyor will automatically start when Thermoglaze reaches operating temperature.

CAUTION!

Donut screens are hot after coming out of the glazer and will burn you if you grab them without the handles.

Cleaning 6

Daily TG Cleaning Instructions

Disassembly

1. Allow the Thermoglaze to completely cool. (All material must under 130º)
2. Pump the unused glaze back into a bucket.
3. **Disconnect the TG from power!**
4. Remove the glaze trough.

5. Remove the drive belt.

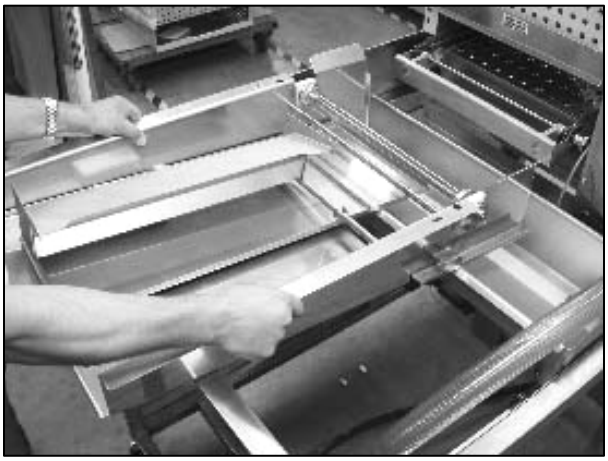

6. Remove the glazer drain tray.

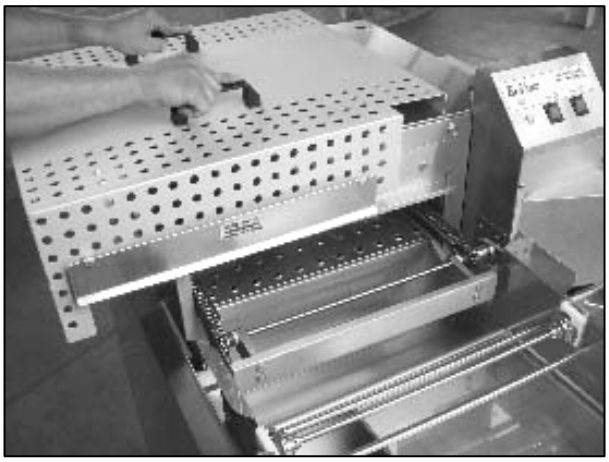

7. Remove the oven heat shield.

8. Disconnect the conveyor drive coupling.

9. Remove the conveyor assembly through the outfeed end of the oven.

10. Turn the end cover latches counterclockwise.

11. Remove the end covers.

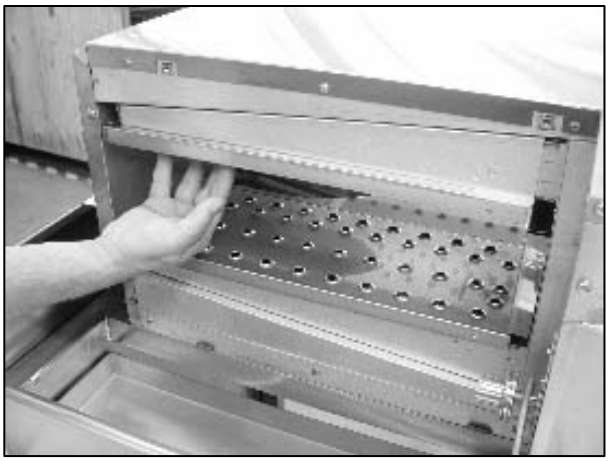

12. Lift up on the outfeed upper finger housing and slide it to the rear of the oven disengaging it from the mounting bracket.

13. Lower the end of the finger assembly.

14. Pull the finger assembly off the duct on the back of the oven and remove it.

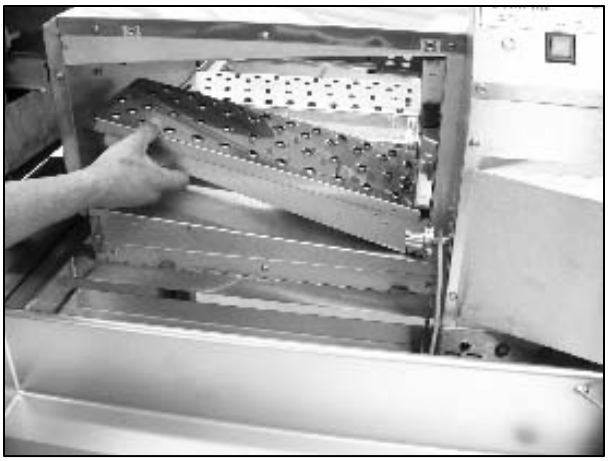

15. Lift up on the outfeed lower finger assembly and remove it.

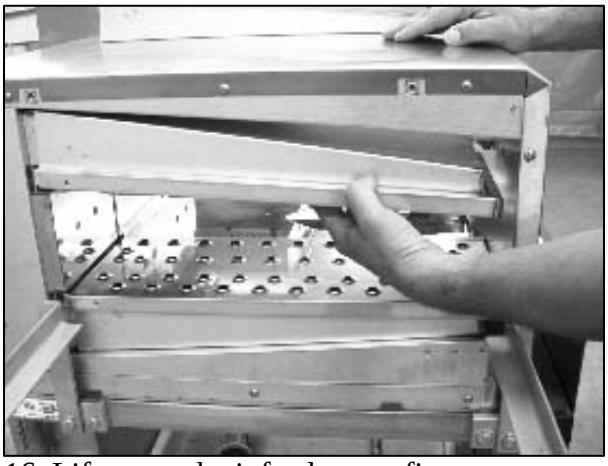

16. Lift up on the infeed upper finger assembly.

17. Slide the infeed upper finger assembly to the rear of the oven.

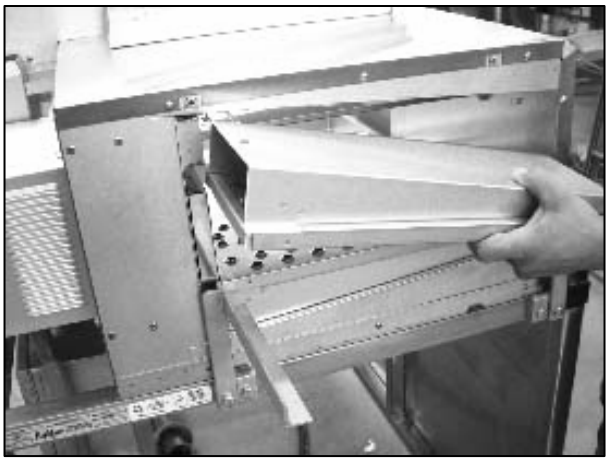

18. Remove the infeed upper finger assembly.

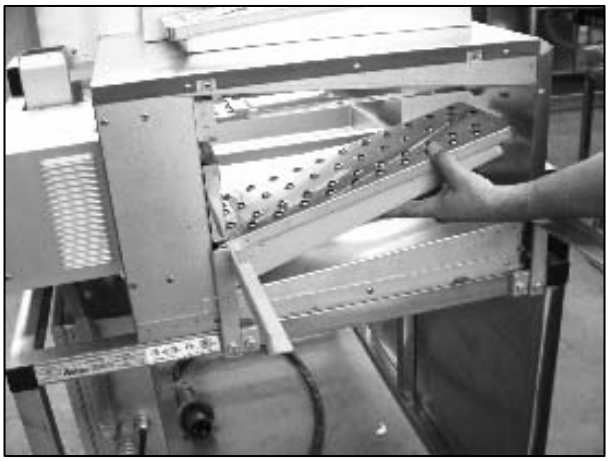

19. Remove the infeed finger assembly.

20. Lift up on the outside end of the upper air duct panel.

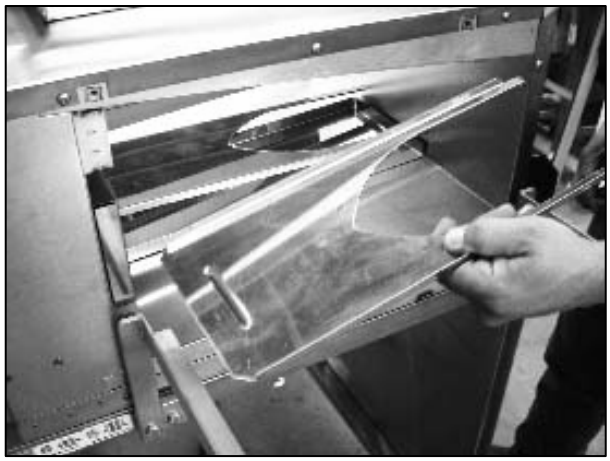

21. Remove the upper air duct panel

22. Lift up on the outside end of the lower air duct panel.

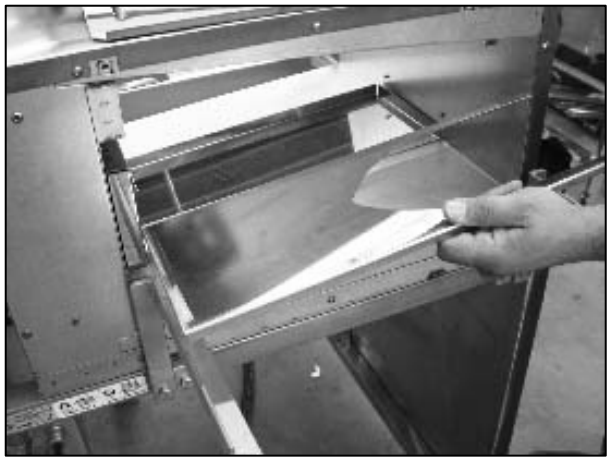

23. Remove the lower air duct panel.

24. Remove the oven crumb tray

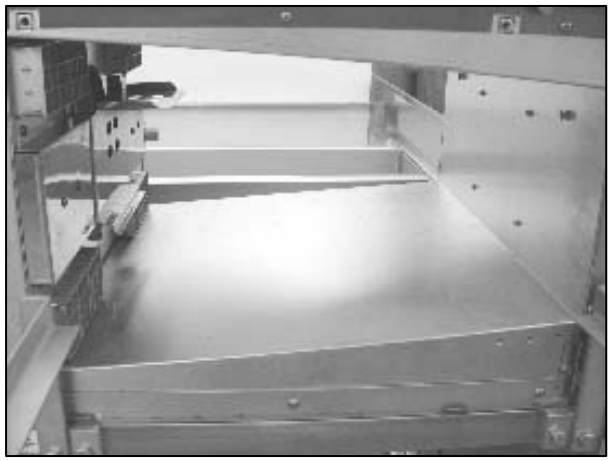

25. Oven with all parts removed.

26. Insert flat tip screwdriver into finger assembly if it cannot be removed by hand.

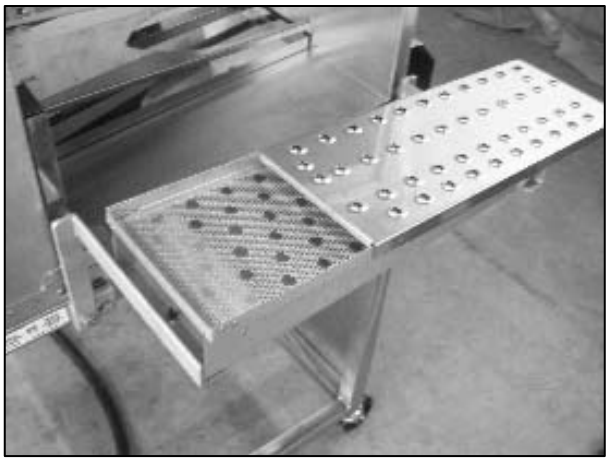

27. Remove the finger cover.

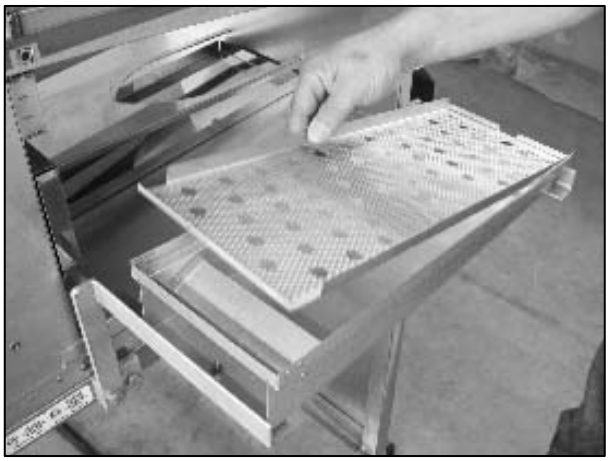

28. Remove the columnating plate.

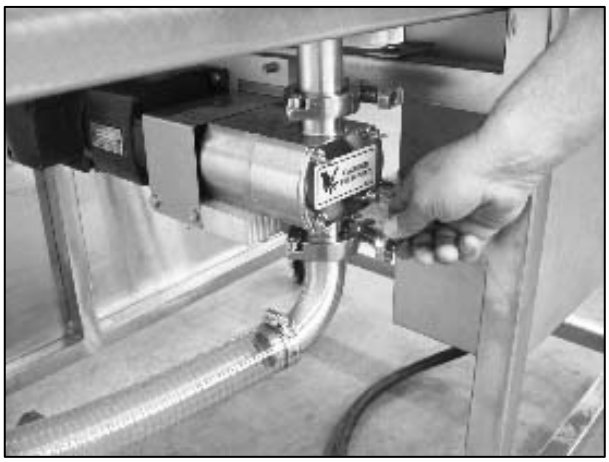

29. Loosen the lower glaze hose clamp.

30. Remove the lower glaze hose clamp and gasket.

31. Remove the upper pump clamp.

32. Lift the glaze reservoir and remove the gasket

33. Remove the glaze reservoir and hose.

34. Remove the drip pan.

35. Remove unscrew the 4 glaze pump cover wing nuts.

36. Remove the glaze pump cover and “O” ring.

37. Remove the glaze pump body.

38. Insert a flat tip screw driver into the slot to loosen the pump body if it can not be removed by hand.

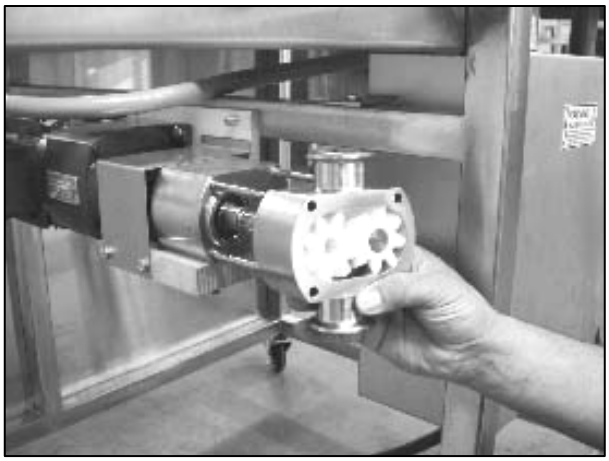

39. Remove the pump body and impellers.

40. Remove the impellers from the pump body.

Cleaning

1. Hand wash all parts of the oven and glazer with warm soapy water.
2. Do not use caustic cleaners on oven parts.
3. You may use an approved oven cleaner on the stainless steel finger cover only. (see step 27 of Disassembly)
4. Do not use oven cleaner on any other part of the oven or glazer!
5. Do not hose/spray down any part of this machine.

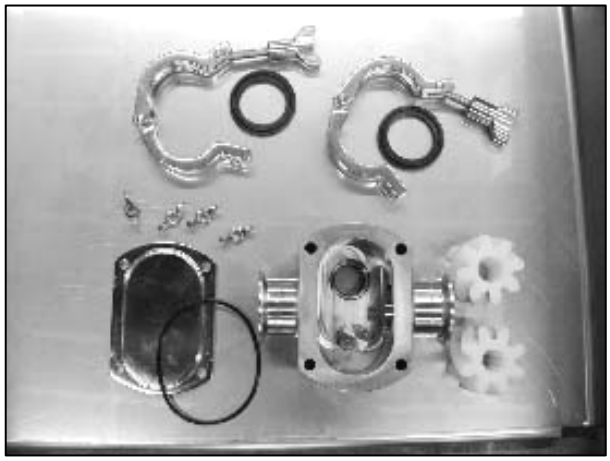

6. Glaze pump body and parts.

CAUTION
Failure to properly clean or lubricate glaze pump may cause damage to the pump gear impellors.

Assembly

NOTE
Lubricate the pump body, shaft “o” ring and gear impellors with food grade mineral oil.

1. Install the glaze pump body.

2. Install the drive gear impeller. Line up the flat on the shaft with the flat in the impeller.

3. Install the lay gear impeller.

4. Install the “O” ring into the glaze pump cover. Make sure it stays in place and you do not pinch it between the pump and cover. The “O” ring may need to be stretched before installing.

5. Install the 4 wing nuts finger tight.

6. Set the upper gasket on top of the glaze pump.

7. Install the drip pan and glaze reservoir.

8. Install the upper clamp.

9. Install the lower gasket, hose and clamp.

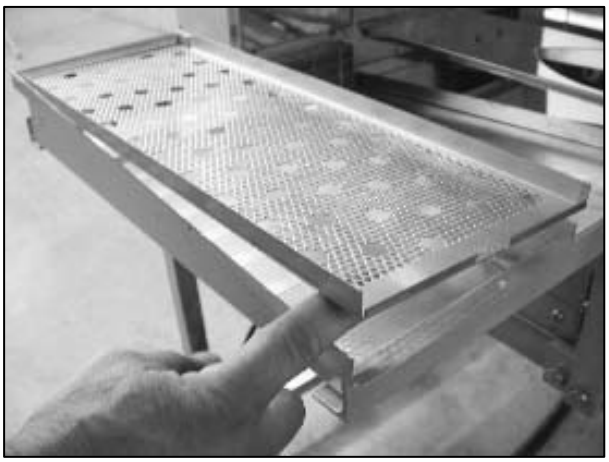

10. Install the columnating plates.

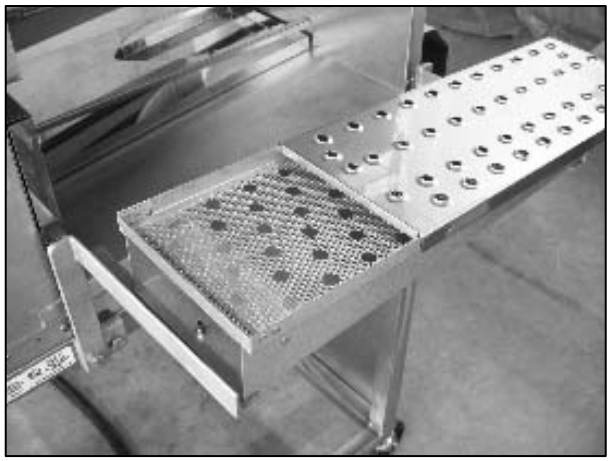

11. Install the finger covers.

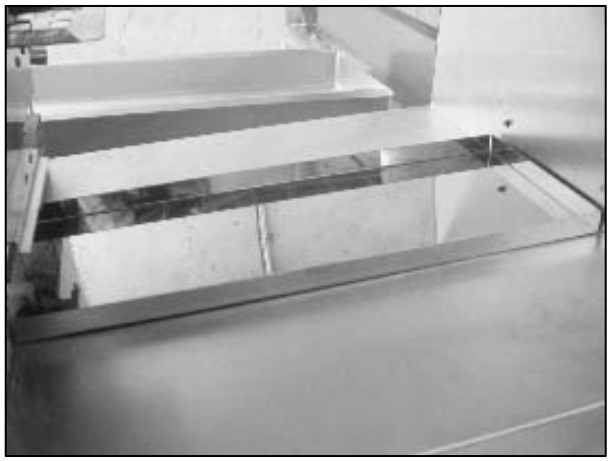

12. Install the oven crumb tray.

13. Install the lower air duct panel.

14. Install the upper air panel assembly.

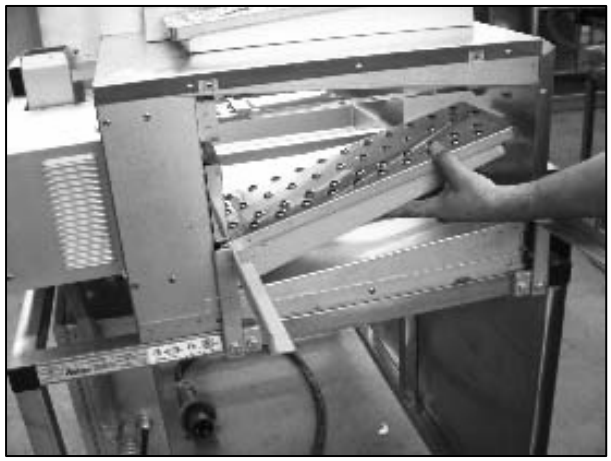

15. Install the lower infeed finger assembly.

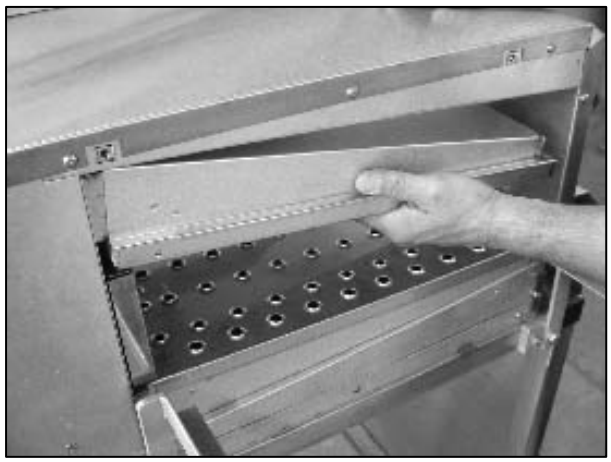

16. Install the upper infeed finger assembly by slipping it over the duct on the back of the oven.

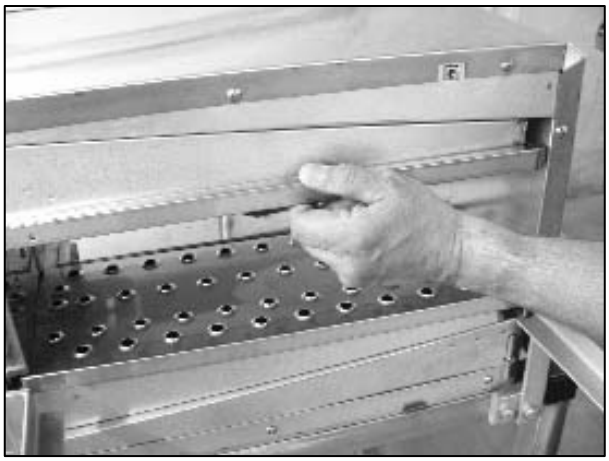

17. Then lift it up, slide it to the front of the oven and hook it on the brackets.

18. Install the lower outfeed finger assembly.

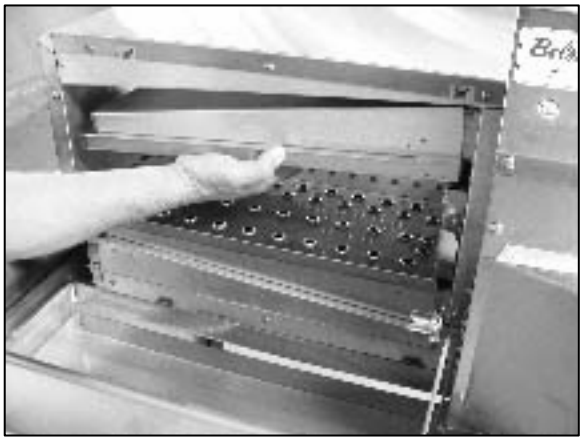

19. Install the upper outfeed finger assembly.

20. Install the infeed end cover by lining up the slots at the bottom of the end cover with the brackets on the oven and push in on the latches and turn clock wise.

21. Install the outfeed end cover same as the infeed.

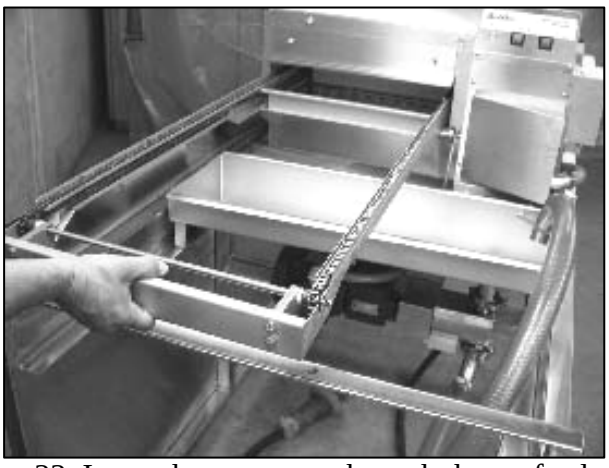

22. Insert the conveyor through the outfeed end of the oven.

23. Pull the drive coupling back and line it up with the conveyor drive shaft.

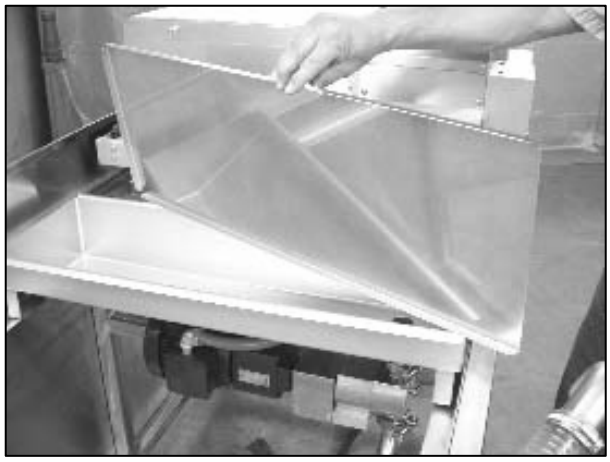

24. Install the glaze reservoir cover

25. Glaze reservoir installed.

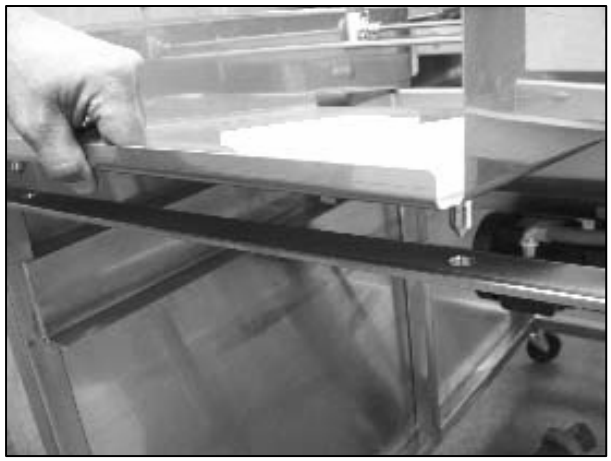

26. Install the glaze drain tray.

27. Connect the drive belt.

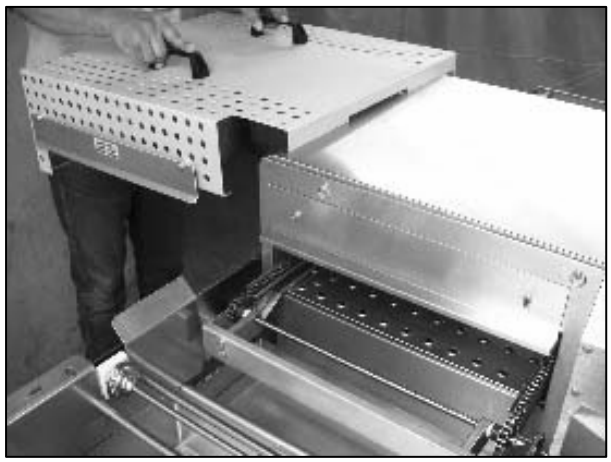

28. Set the heat shield on top of the oven.

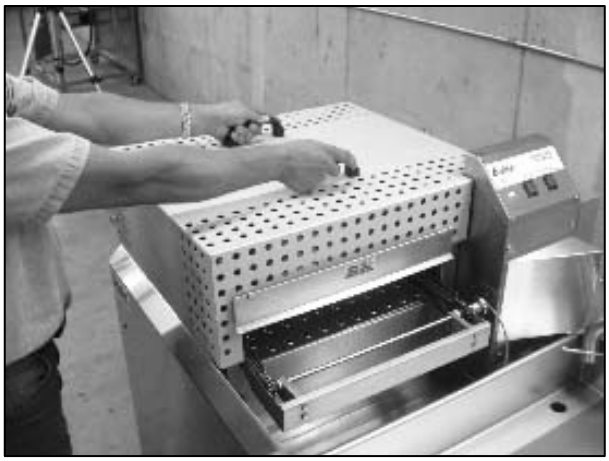

29. Slide the heat shield over the oven.

Maintenance 7

The ThermoGlaze is engineered to need little maintenance. By keeping the system clean, the equipment will last for years. The only maintenance that is required is the following:

When cleaning the donut system, check all rubber gaskets for wear and replace when necessary. Check for wear on impellers of the glaze pump, replace when necessary. .

DO NOT spray machine with water or cleaning agents to clean. Only wipe main unit off with damp cloth.

Troubleshooting 8

Call Belshaw Bros. at (206)322-5474, or (800) 578-2547. One of our customer support representatives will be happy to help you. When you call, please specify the following:

- The model name of the machine.
- The serial number of the machine.
- The voltage, phase, and hertz (cycle) of the machine. This information can be found on the small, rectangular data tag/plate.

CAUTION

If you perform repairs yourself or have them performed by anyone other than Belshaw Bros. or a service technician authorized by Belshaw Bros., you do so at your own risk.

Following is a troubleshooting chart to help you identify and solve some basic problems.

WARNING

Disconnect the machine from the power source before disassembling, repairing, or wiring.

NOTE

See page 31 of the Maintenance Appendix for oven troubleshooting.

CONVEYOR WILL NOT MOVE	
Possible Causes	**What To Do**
Oven not to correct temperature yet.	Wait until the oven comes to temp.and the ready light comes on.
Conveyor is jammed.	Check for obstruction in conveyor and remove.
Motor circuit breaker is tripped.	Push the black circuit breaker reset at bottom of oven control panel.
GLAZER WILL NOT PUMP GLAZE	
Glazer motor is not running.	Check to make sure the motor is running. (See Pump Motor Will Not Run)
Glazer pump impellers are worn.	1. Disconnect power. 2. Replace impellors.
GLAZE IS MISSING THE DONUTS ON ONE SIDE OF THE GLAZE SCREEN	
Glazer or glaze trough is not level.	Adjust level of glaze trough by moving set collar.
Glaze pump is running too slow.	1. Disconnect from power. 2. Open Electrical Enclosure. 3. Turn glazer speed control clockwise. 4. Close Electrical Enclosure.

THE PUMP MOTOR WILL NOT RUN	
Possible Causes	**What To Do**
The connection of the power cord to the power source is faulty.	Make sure the power cord is fully plugged in to a proper power source.
The circuit breaker has been tripped.	1. Disconnect from power. 2. Open electrical enclosure. 3. Reset circuit breaker. 4. Close electrical enclosure.
THE FILL HOSE IS LEAKING	
Possible Causes	**What To Do**
Fill hose is leaking at the connection.	Hose bracket needs adjusting or tightening.
Fill hose is leaking near the pump.	Check for missing or damaged o-ring.

Calibration Procedure for Temperature and Cook Time on the Thermoglaze Model TG50

Turn off power to the TG50 before removing any access covers. This procedure should be performed only by qualified service technicians. Remove the electrical box cover on the oven to access the temperature and speed control adjustment potentiometers. The following is a photo of the location of the adjustment potentiometers for the temperature and cooking time for the Belshaw TG50 Thermoglaze.

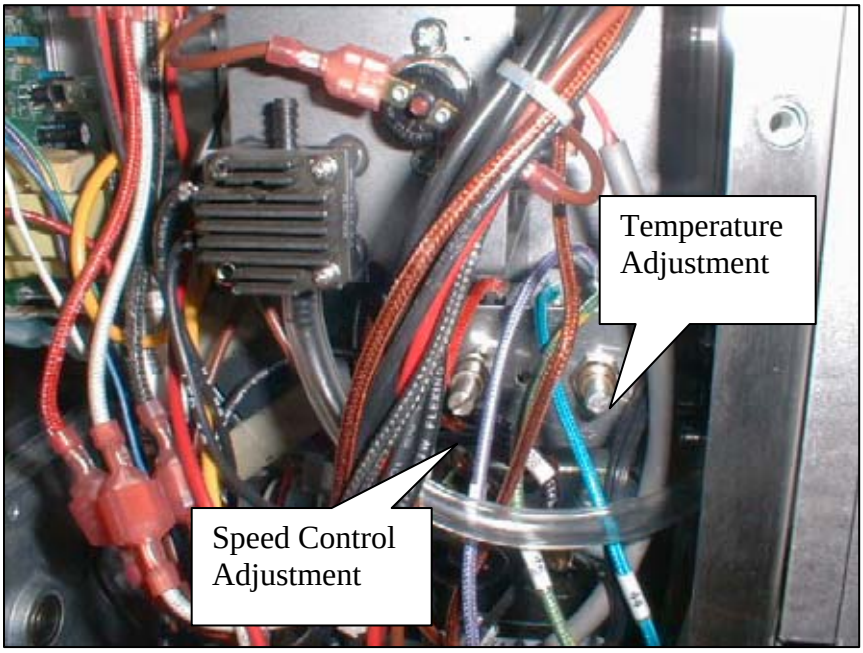

Speed control/cook time adjustment:

Turn on the oven and allow it to heat for 30 minutes.

Put a glaze screen on the conveyor chains that run through the oven. With the oven in operation, time the leading edge of the screen as it enters the oven until the leading edge just leaves the exit end of the oven. Adjust the potentiometer until the desired time/speed is found. To increase the cook time, turn the potentiometer clockwise. To decrease the cook time, turn the potentiometer counterclockwise. The factory setting for cook time for the TG50 is 1 ½ minutes.

Temperature Adjustment:

Measure the temperature from the lower baffle on the exit end of the oven. Place a thermocouple in the hole located on the baffle, 3rd row from the outside, 3rd hole from the back side of the oven. Note: The back side of the oven has a fan motor extended from it. Adjust the temperature by rotating the potentiometer located to the right of the speed control, clockwise increases the temperature, and counterclockwise decreases the temperature. The factory setting is 400º F.

Appendix 9

Final Assembly Drawing	**TNG-2011**
Parts Diagrams	**TNGG-1008**
	TNGG-0526
	TNGG-1009
	TNGV-2004
Wiring Diagram	**TNG-4008**

Maintenance Appendix for ThermoGlaze Oven

Service Kit Parts List

TNG-2011. THERMOGLAZE ASSEMBLY

	BILL OF MATERIAL			
	ITEM	QTY	PART NUMBER	DESCRIPTION
	1	REF	TNGV-2008	LINCOLN IMPINGER OVER (400/230/50/3 CE)
	1	REF	TNGV-2006	LINCOLN IMPINGER OVEN (400/230/50/1)
	1	REF	TNGV-2002	LINCOLN IMPINGER OVEN (208/60/1)
	1	REF	TNGV-2000	LINCOLN IMPINGER OVEN (240/60/1)
3	4	1	TNGV-0077	LABEL; WARNING SAFETY HAZARD
	5	1	TNGV-0512	HEAT SHIELD ASSEMBLY
	6	1	TNGV-0071	LABEL; CONTROL PANEL; THERMOGLAZE
	7	2	TNGV-0060	TRAY GRIP
	9	1	TNGT-1010	WLDT; NON-ADJ. FRAME; THERMOGLAZE; NARROW
	10	1	TNGT-1008	TRNSFR CONV ASY; NON ADJ CHAIN
	11	1	TNGT-0542	WLDT; BRKT; CONV. SUPT; FRONT
	12	1	TNGT-0541	WLDT; BRKT; CONV. SUPT.; REAR
	13	1	TNGT-0534	TRANSFER SHAFT ASSEMBLY
1	14	1	TNGT-0162	FRONT COVER
	15	2	TNGT-0142	SHAFT COLLAR; 1/2" I.D.
	16	1	TNGG-1008	DRAIN TRAY / RAIL ASSY.
	18	1	TNGG-0521	WLDT; GLAZE TANK
	19	1	TNGG-0512	GLAZE TROUGH WLDT; THERMOGLAZE
	20	1	TNGG-0079	COVER; GLAZE TANK
	21	1	TNGG-0077	DRIP TRAY
	22	REF	TNG-1717	ELECTRICAL PARTS (CE/EXPORT) 400/230/50/3
	22	REF	TNG-1714	ELECTRICAL PARTS (PIN & SLEEVE) (CE/EXPORT) 400/230/50/1
2	22	REF	TNG-1710	ELECTRICAL PARTS (NEMA) 240/60/1
2	22	REF	TNG-1711	ELECTRICAL PARTS (PIN & SLEEVE) (DOM) 208/60/1
	27	1	ENC-0524	ELECTRICAL ENCLOSURE; NEMA 4, BACK LOCATION
	28	1	904-0111	LABEL; CAUTION: PINCH POINT
	29	4	903-7549	SST, 3/8 FLAT WASHER, SS, SAE
	30	9	903-7548	WASHER, INTERNAL TOOTH LOCK, 3/8 SST
	31	1	903-5251	3/8-16UNC SS HEX NUT
	32	4	903-5251	3/8-16UNC SS HEX NUT
	33	4	903-1457	SST, 3/8-16 X 1.25 HEX HEAD MACHINE SCREW
	34	4	903-1445	SST, 3/8-16 X 0.75 HEX HEAD MACHINE SCREW
	35	1	903-1437SS	SST, 3/8-16 X 0.625 HEX HEAD MACHINE SCREW
2	36	11	903-0977	SST PAN TRUSS SLOTTED 1/4-20 UNC X 0.625
	37	2	618-0116	LABEL; CAUTION - HOT
1	38	REF	TNGT-0182	COVER; OUTFEED END
2	41	1	TNGG-1009	GLAZE PUMP ASY,EXTENDED (G MODEL GEAR PUMP); SM-CYCLO
	42	1	MDD-0459	LABEL; WARNING; HAZ VOLTAGE

TNG-2011. THERMOGLAZE ASSEMBLY

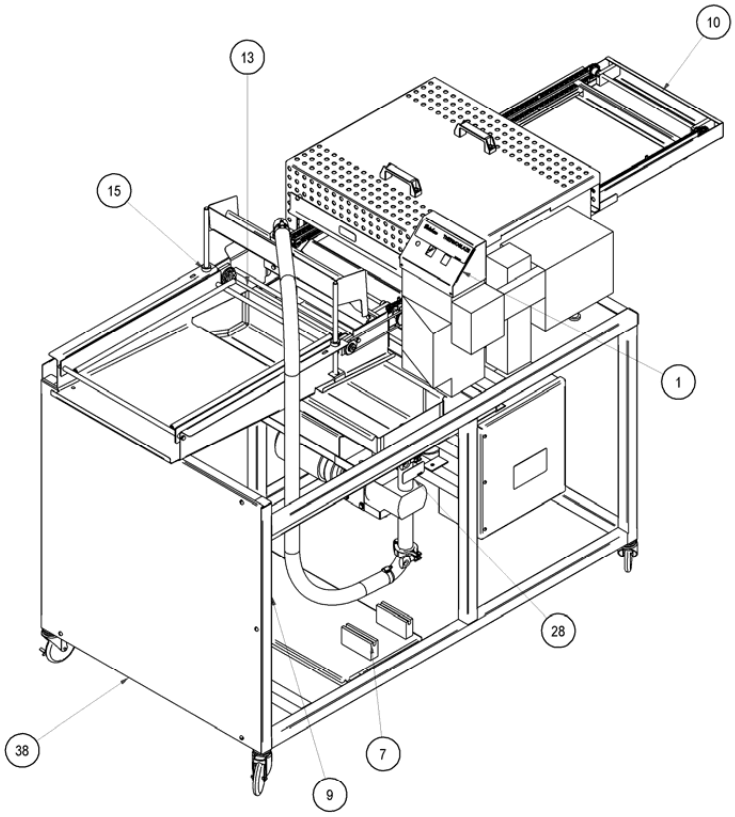

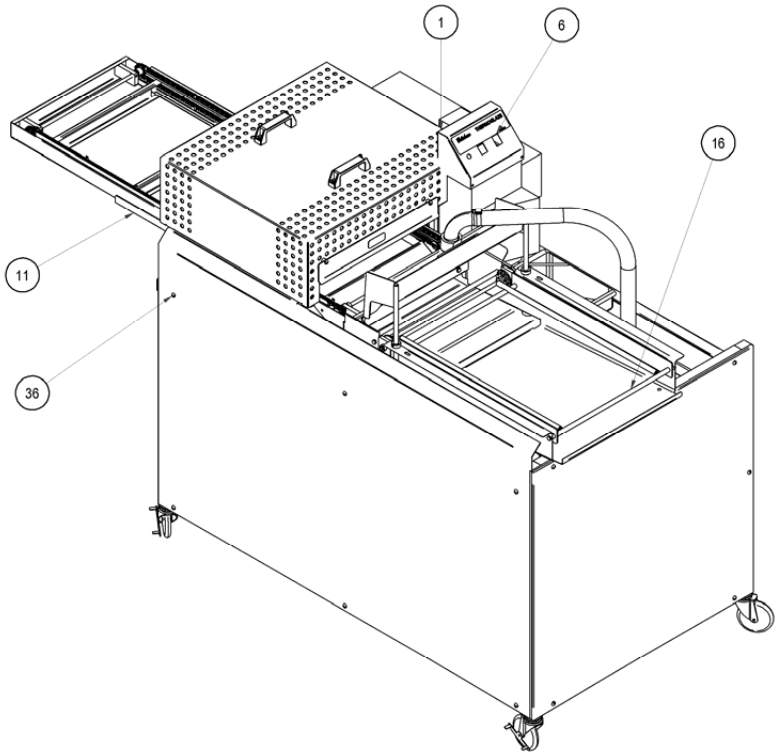

TNG-2011. THERMOGLAZE ASSEMBLY

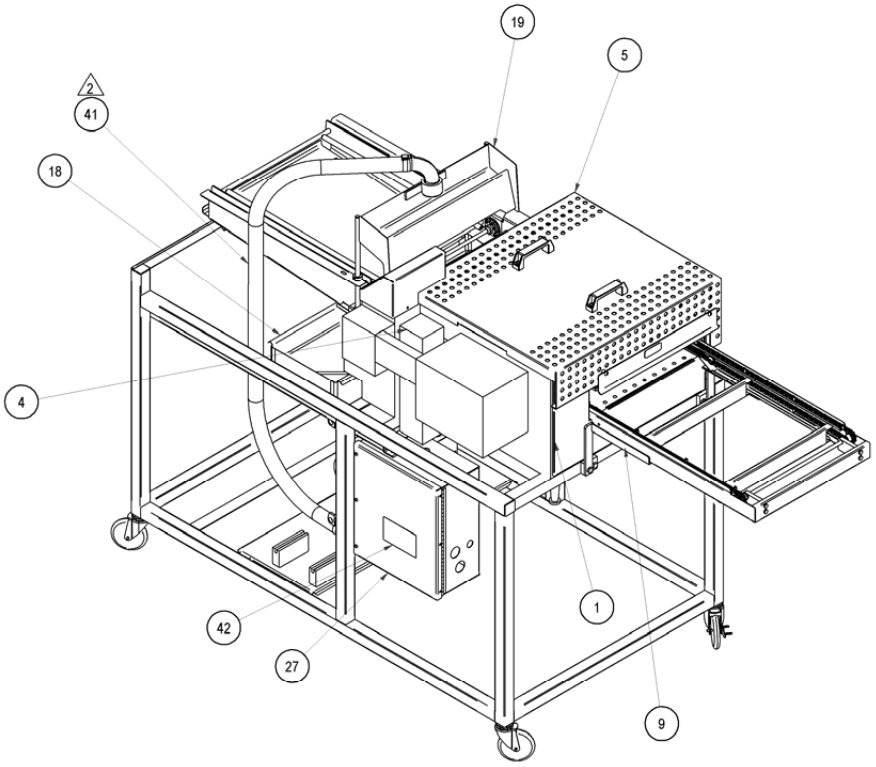

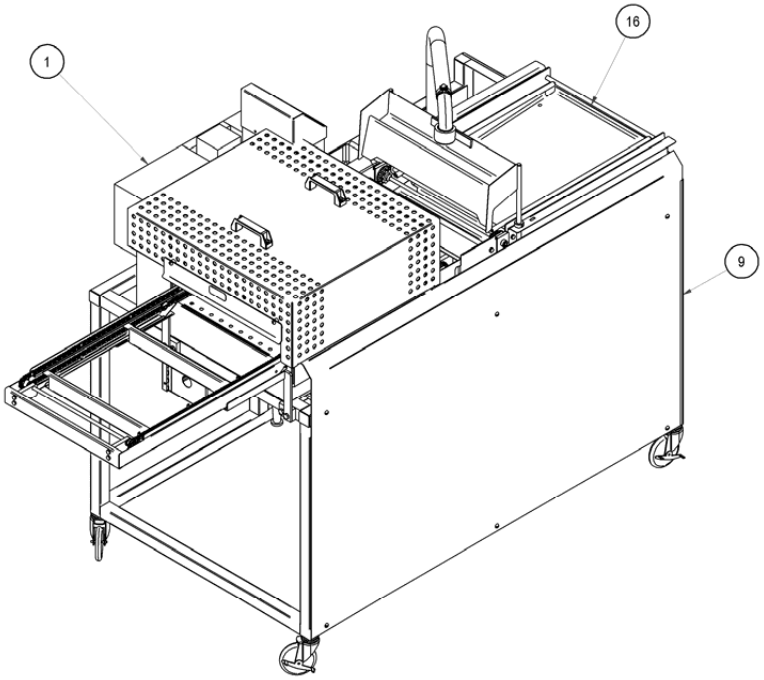

TNG-2011. THERMOGLAZE ASSEMBLY

(REF) WIRING DIAGRAMS:
TNG-4008 (DOM)
TNG-4010 (CE/EXPORT-1PH)
TNG-4012 (CE/EXPORT-3PH)

2 NOTES - :

1- APPLY SILICONE SEAL BETWEEN FRAME & FRONT COVER, ALSO BET. ENCLOSURE TOP MOUNTING HOLE & FRAME.

2- TNGG-1010 EXTENDED GLAZE PUMP ASS'Y WILL WORK AS AN ALTERNATE ASS'Y.

3- SEE SK-1268 FOR SM-CYCLO GEAR MOTOR FIELD REPLACEMENT BEFORE 09-01-03

4- SEE SK-1272 FOR EXTENDED GLAZE PUMP FIELD REPLACEMENT BEFORE 10-01-03

5- SEE TNGG-0526 FOR GLAZE HOSE ASS'Y REPLACEMENT.

3 6- TNGG-1011 IS (HEATER HOUSING ASSY).

3 SK-1257 SPARE PARTS KIT, THERMOGLAZE (SEND W/UNIT).
SK-1258 SERVICE KIT, THERMOGLAZE / THERMOLIZER.
3 SL200-0004 GLAZING SCREEN 17" X 25"

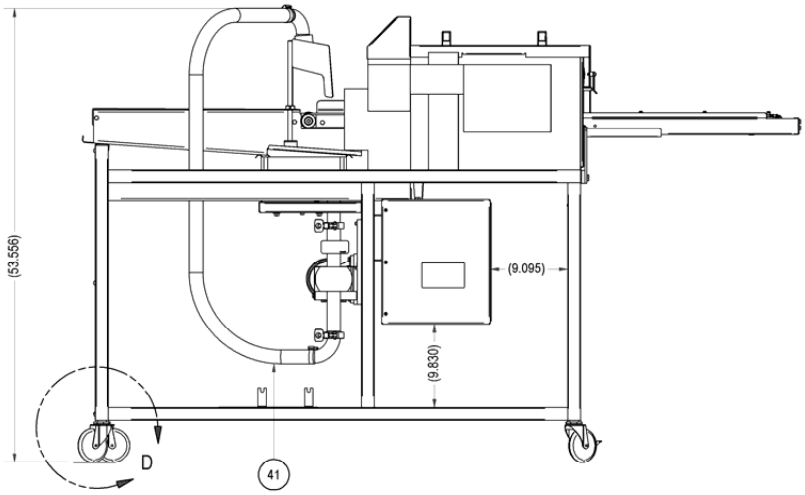

REAR VIEW

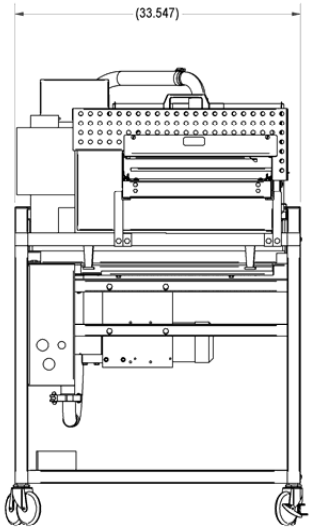

INFEED END

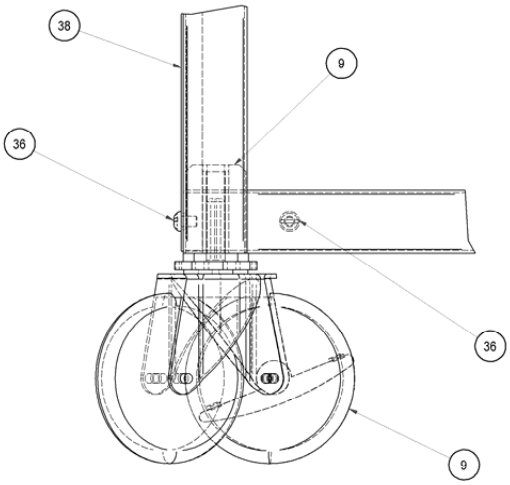

DETAIL D
SCALE 1 / 2

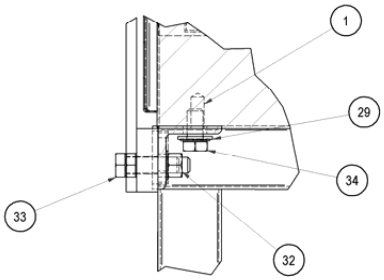

DETAIL B
SCALE 1 / 2

TNG-2011. THERMOGLAZE ASSEMBLY

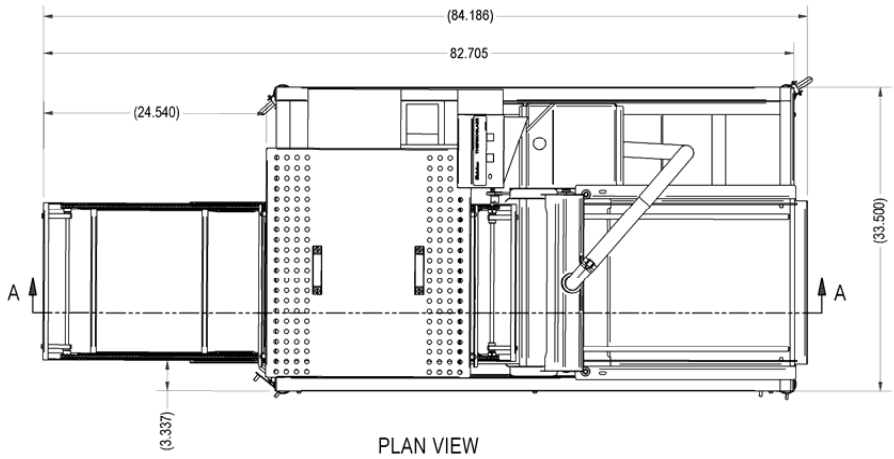

PLAN VIEW

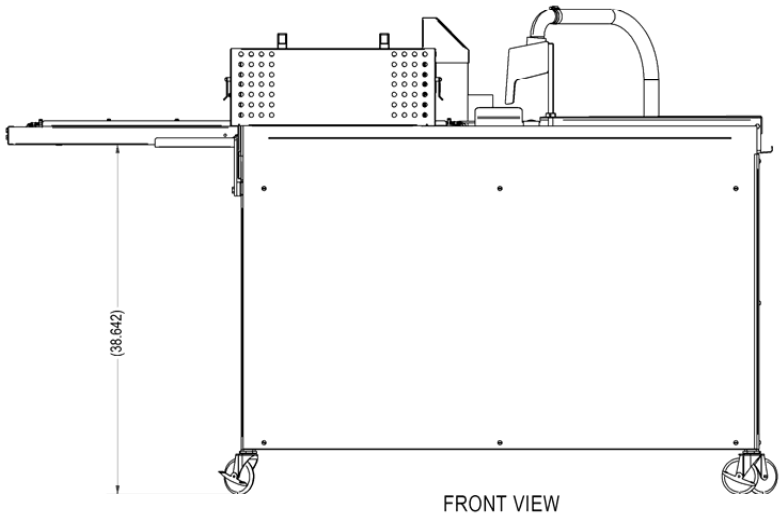

FRONT VIEW

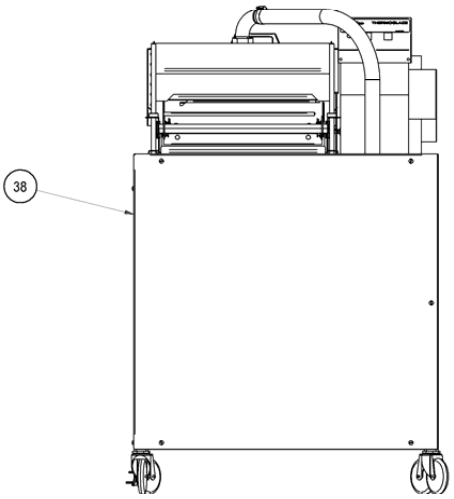

OUTFEED END

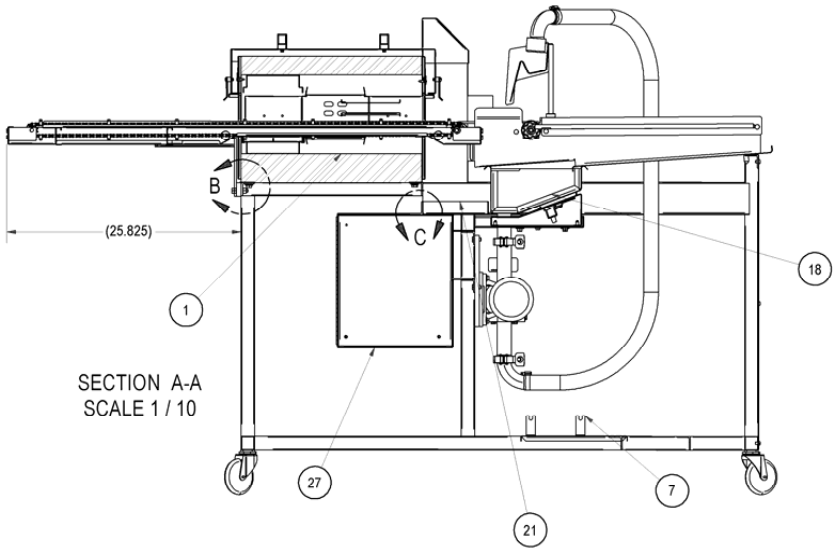

SECTION A-A
SCALE 1 / 10

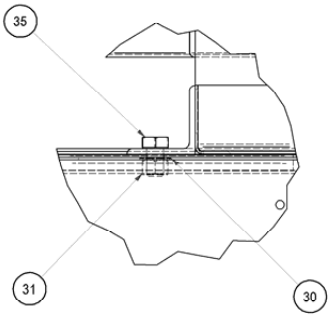

DETAIL C
SCALE 1 / 2

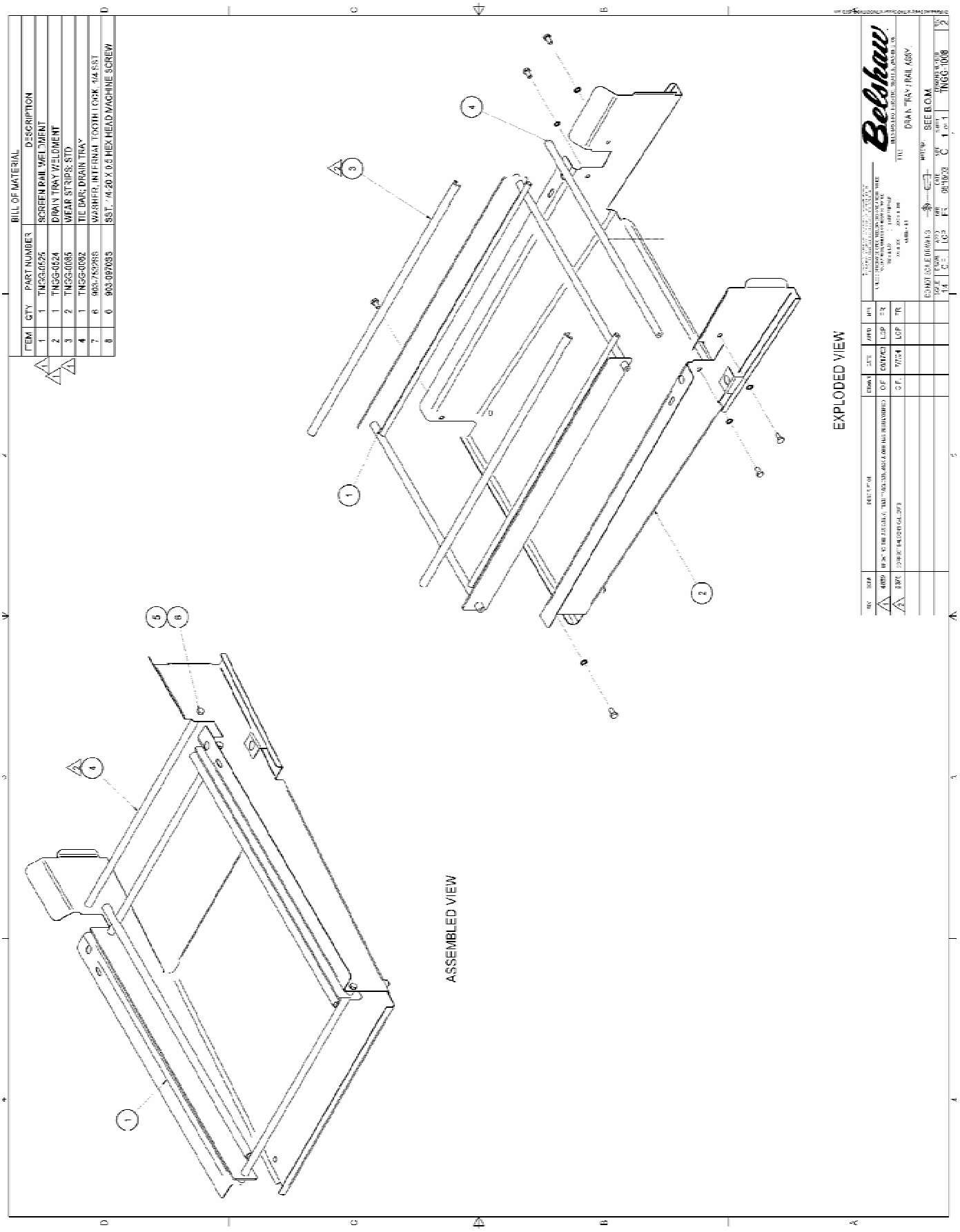
BILL OF MATERIAL
ITEM QTY PART NUMBER DESCRIPTION
1 1 TNGG-0625 SCREEN RAIL WELDMENT
2 1 TNGG-0624 DRAIN TRAY WELDMENT
3 2 TNGG-0085 WEAR STRIPS; STD
4 1 TNGG-0092 TIE BAR; DRAIN TRAY
7 8 903-769985 WASHER, INTERNAL TOOTH LOCK 1/4 SST
8 6 903-097093 SST, 1/4-20 X 0.5 HEX HEAD MACHINE SCREW
EXPLODED VIEW
ASSEMBLED VIEW
Belshaw
DRAIN TRAY / RAIL ASSY
SEE B.O.M.
TNGG-1008

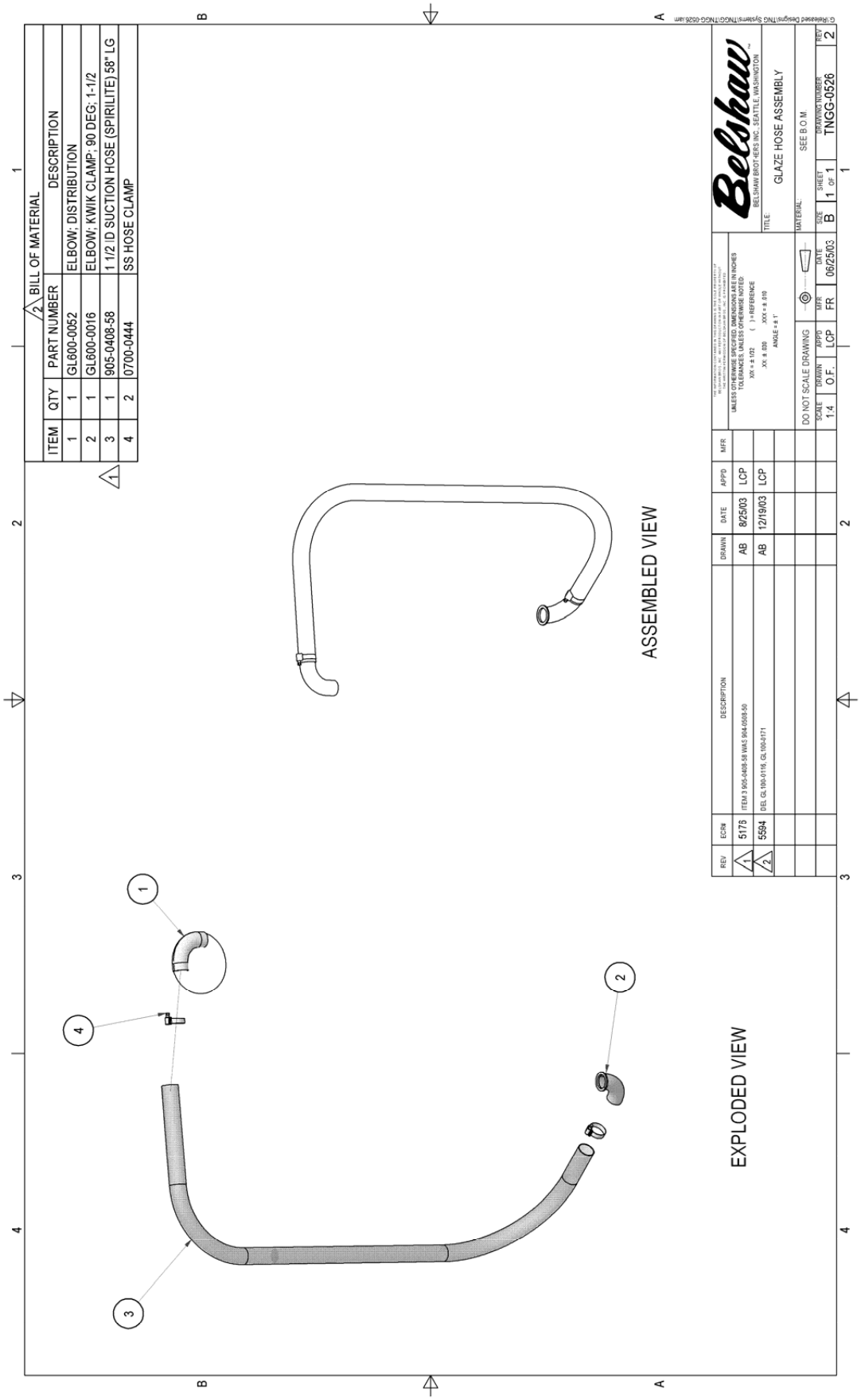
BILL OF MATERIAL
ITEM QTY PART NUMBER DESCRIPTION
1 1 GL600-0052 ELBOW; DISTRIBUTION
2 1 GL600-0016 ELBOW; KWIK CLAMP; 90 DEG; 1-1/2
3 1 905-0408-58 1 1/2 ID SUCTION HOSE (SPIRILITE) 58" LG
4 2 0700-0444 SS HOSE CLAMP
ASSEMBLED VIEW
EXPLODED VIEW
REV ECN# DESCRIPTION DRAWN DATE APP'D MFR
1 5175 ITEM 3 905-0408-58 WAS 904-0508-50 AB 8/25/03 LCP
2 5554 DEL GL 100-0116, GL 100-0171 AB 12/19/03 LCP
UNLESS OTHERWISE SPECIFIED, DIMENSIONS ARE IN INCHES
TOLERANCE UNLESS OTHERWISE NOTED
XX = ± 1/32 ( ) = REFERENCE
XX = ± .030 XXX = ± .010
ANGLE = ± 1°
DO NOT SCALE DRAWING
SCALE 1:4 DRAWN O.F. APP'D LCP MFR FR DATE 06/25/03
Belshaw
BELSHAW BROTHERS INC., SEATTLE, WASHINGTON
TITLE: GLAZE HOSE ASSEMBLY
MATERIAL: SEE B.O.M.
SIZE B SHEET 1 OF 1 DRAWING NUMBER TNGG-0526 REV 2

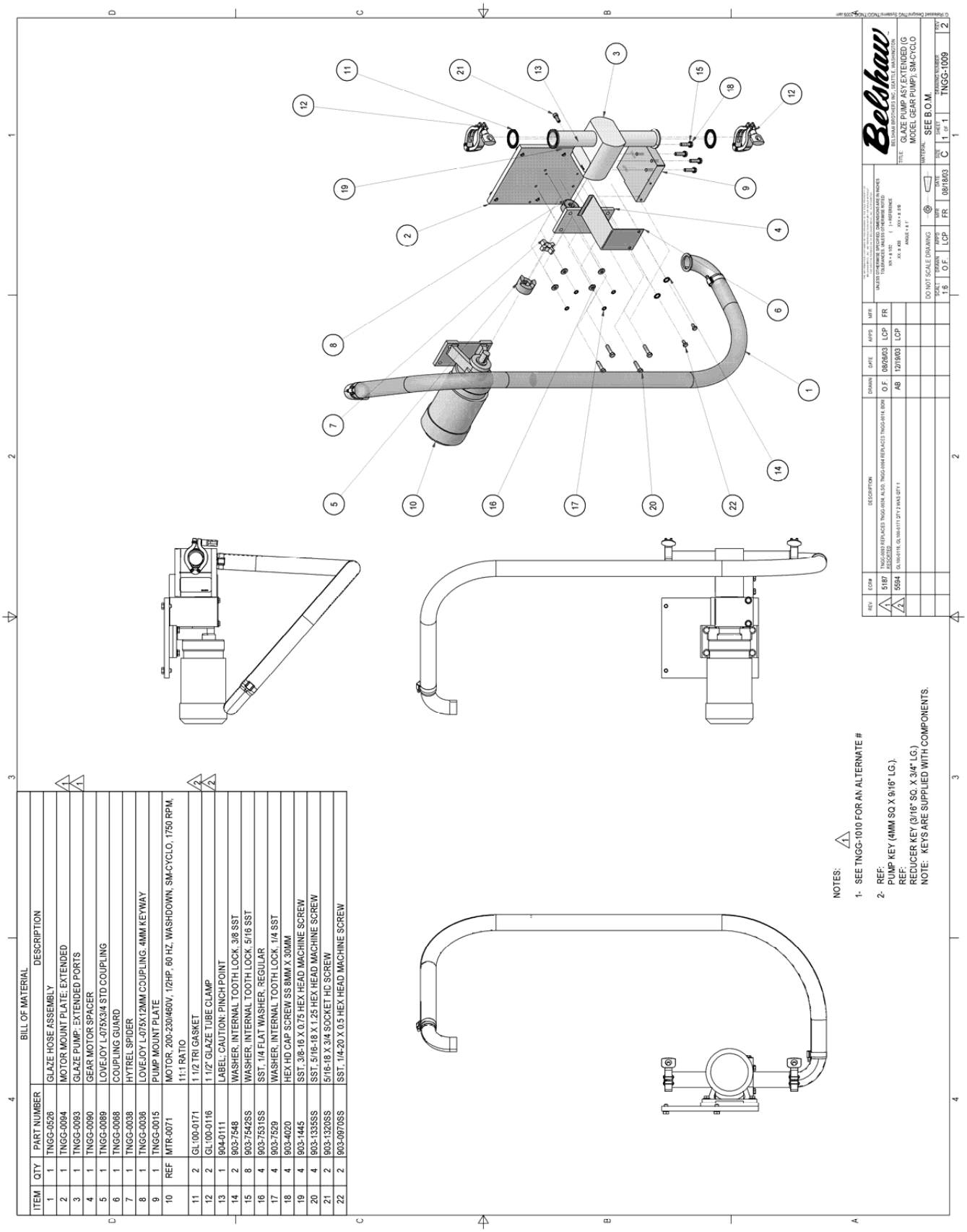
BILL OF MATERIAL
ITEM QTY PART NUMBER DESCRIPTION
1 1 TNGG-0526 GLAZE HOSE ASSEMBLY
2 1 TNGG-0094 MOTOR MOUNT PLATE: EXTENDED
3 1 TNGG-0093 GLAZE PUMP: EXTENDED PORTS
4 1 TNGG-0090 GEAR MOTOR SPACER
5 1 TNGG-0089 LOVEJOY L-075X3/4 STD COUPLING
6 1 TNGG-0068 COUPLING GUARD
7 1 TNGG-0038 HYTREL SPIDER
8 1 TNGG-0036 LOVEJOY L-075X12MM COUPLING. 4MM KEYWAY
9 1 TNGG-0015 PUMP MOUNT PLATE
10 REF MTR-0071 MOTOR, 200-230/460V, 1/2HP, 60 HZ, WASHDOWN, SM-CYCLO, 1750 RPM, 11:1 RATIO
11 2 GL100-0171 1 1/2 TRI GASKET
12 2 GL100-0116 1 1/2" GLAZE TUBE CLAMP
13 1 904-0111 LABEL, CAUTION: PINCH POINT
14 2 903-7548 WASHER, INTERNAL TOOTH LOCK, 3/8 SST
15 8 903-7542SS WASHER, INTERNAL TOOTH LOCK, 5/16 SST
16 4 903-7531SS SST, 1/4 FLAT WASHER, REGULAR
17 4 903-7529 WASHER, INTERNAL TOOTH LOCK, 1/4 SST
18 4 903-4020 HEX HD CAP SCREW SS 8MM X 30MM
19 4 903-1445 SST, 3/8-16 X 0.75 HEX HEAD MACHINE SCREW
20 4 903-1335SS SST, 5/16-18 X 1.25 HEX HEAD MACHINE SCREW
21 2 903-1320SS 5/16-18 X 3/4 SOCKET HD SCREW
22 2 903-0970SS SST, 1/4-20 X 0.5 HEX HEAD MACHINE SCREW
NOTES:
1- SEE TNGG-1010 FOR AN ALTERNATE #
2- REF:
PUMP KEY (4MM SQ X 9/16" LG.).
REF:
REDUCER KEY (3/16" SQ. X 3/4" LG.)
NOTE: KEYS ARE SUPPLIED WITH COMPONENTS.
REV ECN# DESCRIPTION DRAWN DATE APPD MFR
5187 TNGG-0093 REPLACES TNGG-0034 ALSO, TNGG-0044 REPLACES TNGG-0014 BOM ASSOCIATED O.F. 08/26/03 LCP FR
5594 GL100-0116, GL100-0171 QTY 2 WAS QTY 1 AB 12/19/03 LCP
DO NOT SCALE DRAWING
SCALE: 1:9 DRAWN O.F. TOPO LCP MFR FR DATE 08/18/03
Belshaw
TITLE: GLAZE PUMP ASY EXTENDED (G MODEL GEAR PUMP), SM-CYCLO
MATERIAL: SEE B.O.M.
SIZE C SHEET 1 of 1 DRAWING NUMBER TNGG-1009 REV 2

REFERENCE P/N's FOR REPLACEMENT PARTS

ITEM	QTY	LINCOLN P/N	DESCRIPTION	USED
A	1	~~369454~~	AIR DUCT PANEL,UPPER	NO
G	1	~~369453~~	AIR DUCT PANEL, LOWER	NO
N	4	369407	FASTENER & SPLIT RING RETAINER	YES
O	1	~~369447~~	COVER PANEL ASSEMBLY, RIGHT	NO
Q	1	369460	COMPRESSION SPRING	YES
R	1	~~369410~~	COUPLING SLEEVE	NO
W	4	~~369401~~	LEG, 4"	NO
DD	1	~~369446~~	COVER PANEL ASSEMBLY, LEFT	NO
FF	1	~~369455~~	CONVEYOR BAFFLE	NO
JJ	4	369491	FINGER COVER - S/N 3002168 & ABOVE	YES
KK	4	369490	COLUMNATING PLATE - S/N 3002168 & ABOVE	YES
LL	4	369488	FINGER HOUSING - S/N 3002168 & ABOVE	YES
L	1	369916	TOP/FRONT COVER PANEL	YES
M	1	369484	COVER PANEL ASSEMBLY	YES
GG	4	369211	THUMB SCREW	YES
			CONVEYOR	NO
	A/R	~~PART OF 1301~~	BAFFLES/FRONT COVER	NO

BILL OF MATERIAL FOR KIT

ITEM	QTY	PART NUMBER	USE LINCOLN	DESCRIPTION
1	REF	TNGV-2002	~~1301-20~~	LINCOLN IMPINGER OVEN - (208V)
2	1	~~TNGV-0504~~	9004665	WELDMENT, FACEPLATE, OUTFEED - 17 5/8
3	1	~~TNGV-0505~~	9004664	WELDMENT, FACEPLATE, INFEED - 17 5/8
6	2	~~TNGV-0036~~	7007486	INFEED TUNNEL - 17 5/8
7	2	~~TNGV-0032~~	7007485	INNER SUPPORT BRACKET - 17 5/8
8	2	~~TNGV-0033~~	7007487	INNER SIDE PANEL - 17 5/8
14	1	~~TNGV-0056~~	7007484	AIR DUCT PANEL - 17 5/8
17	1	903-7549		SST, 3/8 FLAT WASHER, SS, SAE
18	1	903-0325.A		SS SCW ROUND HEAD SLOTTED 6-32 UNC X 0.375
19	2	618-116		Label; Caution - Hot
1 20	12	905-0721		RIVETS (NOT SHOWN)
21	1	~~TNGV-0087~~	7007565	OVEN FRONT COVER; LOWER
22	1	~~TNGV-0054~~	7007499	INNER CENTER PANEL 17 5/8 - ONE PIECE
23	1	~~TNGV-0070~~	7007497	SHELF SUPPORT - 17 5/8
24	1	~~TNGV-0069~~	9004998	ENCLOSURE; CONTROL
25	1	~~TNGV-0055~~	7007488	DRIP PAN

NOTES: 1 ITEM 8 RIVETS, STAINLESS, DOME HEAD, Ø3/16 X .315 LONG
GRIP RANGE 1/16 TO 1/8
HEAD Ø3/8
McMASTER-CARR #97517A045

2. SEE LINCOLN INSTALLATION & OPERATING INSTRUCTIONS, IMPINGER CONVEYOR OVENS - MODEL SERIES 1300 (1301)

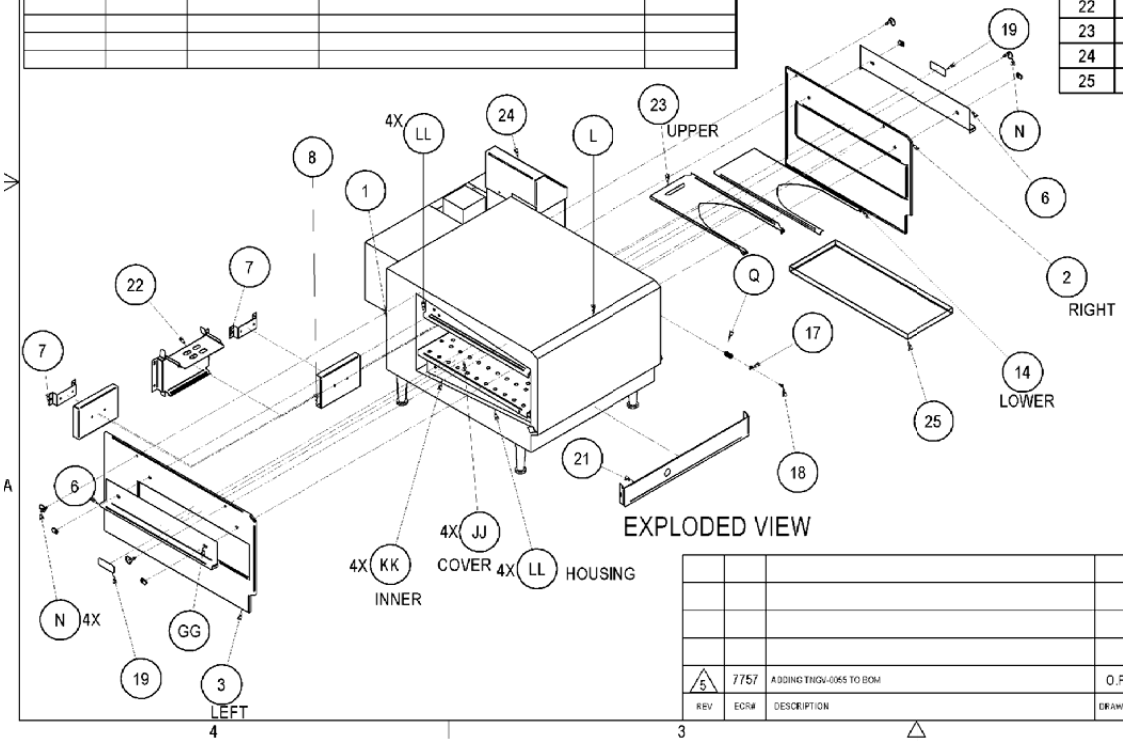

EXPLODED VIEW

REV	ECR#	DESCRIPTION	DRAWN	DATE	APPD
5	7757	ADDING TNGV-0065 TO BOM	O.F.	8/16/05	LCP

UNLESS OTHERWISE SPECIFIED, DIMENSIONS ARE IN INCHES
TOLERANCES, UNLESS OTHERWISE NOTED:
FRACTIONS ±1/32 DECIMALS .XX ±.03 .XXX ±.010 ANGLES ±1°
FINISH TO BE 125 OR BETTER

DO NOT SCALE DRAWING

SCALE	DRAWN	APPD	DATE
1:12	AB	LCP	7/31/02

Belshaw
BELSHAW BROTHERS INC., SEATTLE, WASHINGTON

TITLE: OVEN MOD. KIT -17 5/8 (208V 60HZ)

MATERIAL: SEE B.O.M.

SIZE	SHEET	DRAWING NUMBER	REV
B	1 OF 1	TNGV-2004	5

SK-1252 FOR THERMOGLAZE/THERMOLIZER UNIT W104-249

REC. QTY	PART NUMBER	DESCRIPTION
	THERMOGLAZE	
1 EA	#RLY-0008	RELAY (240V)
1 EA	#SWT-0022-240	ILLUMINATED ROCKER SWITCH
1 EA	#TDR-0015	TIME DELAY RELAY
2 EA	905-0201SS X 7/8	SPRING PIN, 1/8 DIA X 7/8 LG
2 EA	905-0203SS	SPRING PIN, 1/8 DIA X 3/4 LG
5 FT	905-0408	1 1/2 ID SUCTION HOSE (SPIRILITE) 54" LG.
6 EA	975-0060X1/2	O-RING
2 EA	GL100-0116	GLAZE TUBE CLAMP
4 EA	GL100-0171	GASKET
1 EA	HG18-0031-4	CASTER 4"
1 EA	HG18-0031B-4	CASTER W/BRAKE 4"
1 EA	TNGG-0034C	DRIVE GEAR
1 EA	TNGG-0034D	LAY GEAR
4 EA	TNGG-0034M	WING NUTS, PUMP COVER
2 EA	TNGG-0034V	PUMP O-RINGS
2 EA	TNGT-0079	BEARING BLOCK, POWER SHAFT
1 EA	TNGT-0080	POWER SHAFT
2 EA	TNGT-0082	TRANSFER SHAFT DRIVE BELT
2 EA	TNGT-0100	ROLLER
2 EA	TNGT-0167	REPL. CHAIN ASS'Y
1 EA	TNGT-0539	SPLASH SHIELD, FRONT
1 EA	TNGT-0540	SPLASH SHIELD, BACK
2 EA	TNGV-0060	TRAY GRIP
	THERMOLIZER	
1 EA	#BLWR-0010	FAN, AXIAL, 240 V
1 EA	DR42-0048	MICROSWITCH
1 EA	EP18/24-0116	THERMOSTAT
1 EA	EP18/24-0250	AIR HEATING COIL (240 V)
1 EA	EP18/24-0516	WATER HEATER ASSY. (240 V)
2 EA	EP18/24-1002	DOOR ASSY.
1 EA	GL100-0086	INFINITE CONTROL, 240V

FEB 28 2003 ORIG. DWG.

ECR#4465 (R3) 2/28/2003

SK-1258 R5

REC. QTY	PART NUMBER	DESCRIPTION
	THERMOGLAZE	
1 EA	#RLY-0008	RELAY (240V)
1 EA	#SWT-0022-240	ILLUMINATED ROCKER SWITCH
1 EA	#TDR-0015	TIME DELAY RELAY
5 EA	905-0242-7/8	HD SPRING PIN, 1/8 DIA X 7/8" LG
5 FT	905-0408-58	1 1/2 ID SUCTION HOSE (SPIRILITE) 58" LG.
2 EA	GL100-0116	GLAZE TUBE CLAMP
4 EA	GL100-0171	GASKET
1 EA	HG18-0031-4	CASTER 4"
1 EA	HG18-0031B-4	CASTER W/BRAKE 4"
1 EA	TNGG-0034C	DRIVE GEAR
1 EA	TNGG-0034D	LAY GEAR
4 EA	TNGG-0034M	WING NUTS, PUMP COVER
2 EA	TNGG-0034T	COVER O-RING
2 EA	TNGG-0034Z	PUMP O-RING, SHAFT
4 EA	TNGT-0009	SPACER, DELRIN, WHITE
2 EA	TNGT-0079	BEARING BLOCK, TRANSFER SHAFT
1 EA	TNGT-0080	TRANSER SHAFT
2 EA	TNGT-0082	TRANSFER SHAFT DRIVE BELT,-ORANGE
2 EA	TNGT-0167	REPL. CHAIN ASS'Y
2 EA	TNGT-0169	IDLER SPROCKET, 38B10
1 EA	TNGT-0171	CONVEYOR DRIVE SHAFT, OUTFEED
2 EA	TNGV-0060	TRAY GRIP

TROUBLESHOOTING GUIDE

IMPINGER CTI

SYMPTOM	POSSIBLE CAUSE	EVALUATION
Oven fan will not run	Incoming Power Supply	Check breakers, reset if required Check power plug to be sure it is firmly in the receptacle (if applicable). Measure the incoming power, call Power Co., if needed
	Oven Fan Fuses, 5 Amp	Check and/or replace
	Fuse Holder	Check and/or replace
	High Limit Thermostat Control Box (**Note**: High Limit not used in ovens S/N 3000352)	Check for voltage on both sides of the switch. Terminals are normally closed. If open, reset and test oven for proper operation. If thermostat and below.) will not hold and control box temperature is not exceeding 140°F (60°C), replace thermostat.
	Fan Switch	Check continuity between switch terminals. Check and insure good wire connections
	20 Minute Time Delay	Check for supply voltage at terminal #1 to ground on the 20-minute timer. If no voltage is present, trace wiring back to power supply. If voltage is present at terminal #1, check for supply voltage at terminal #2 to ground. If no voltage is present, and the oven fan switch is closed, replace the 20-minute timer.
	Main Fan Relay	Check continuity of coil. Check for power to relay coil. Visually check for contact pull in and contact condition. Check for voltage across relay terminals.
	Fan Motor	Check for opens, shorts, or grounds. WITH POWER OFF: Turn fan blade to check for locked rotor.
	Capacitor	Check for opens, shorts, or grounds. ***WARNING*** Capacitor has a stored charge, discharge before testing.
No main fan cool down	20-Minute Timer	Check for supply voltage at terminal #2 and #3 while main fan is running. Turn off fan switch and supply voltage should continue to be present for 20 min. at terminal #2. Replace as needed.
Main fan continues to run after cool down	20 Minute Timer	**NOTE**: On/Off operation of fan switch will reset timer to 20 minutes. If timer is accidentally reset, turn off main breaker to cancel. If voltage continues to be present at terminals 2 and 3 after 20 minutes, verify fan switch contacts have opened, replace timer as needed.
No control box cooling	Fan Switch	WITH POWER OFF: Close switch and check for continuity across switch terminals.
	20 Minute Timer	See "Main Fan Motor will not run."
	Cooling Fan	Check for voltages at the fan motor, if present, replace defective fan motor.

Oven will not heat	Main Oven Fan	Check if main oven fan is working. If not, refer to "Oven Fan Will Not Run".
	Temperature Control Board	Check for voltage input at the board. Turn the temperature adjustment knob to the maximum temperature position and check for voltage at the load terminal. If present, and unit is not heating, refer to "Air pressure switch" for next check. If no voltage is present, proceed.
	Thermocouple Sensor	Check terminals, wiring, and proper location of the sensor bulb. It must be in its spring holder located in the inside, rear, lower right hand corner (viewed from front) behind Finger #4. The thermocouple is a type J and has one red lead (Neg.) and one white lead (Pos.).WITH POWER ON AND THERMOCOUPLE LEADS ATTACHED TO THE TEMPERATURE CONTROL BOARD: Measure the D.C. millivolt output of these leads. Refer to thermocouple chart in Section D for proper readings. If these readings are not achieved, replace the thermocouple.
	Temperature Set Potentiometer	Disconnect the potentiometer leads from the board. Place ohm meter test leads on the blue and green pot. leads. Reading should be 1 K ohms. Place meter leads across the blue and purple pot. leads and rotate knob from high to low. Repeat on green and purple leads. Check for even rise and fall of ohms reading to insure that there are no open or dead spots in the potentiometer. Check each lead to ground for shorts. Replace Pot. if it does not meet the above test.
	Hi Limit Thermostat-Oven Cavity	Terminals are normally closed, open at 660°F (350°C). If open, push in reset button and retest. If thermostat will not hold for maximum oven temperature, and oven is not exceeding temperature dial setting, check for proper location of capillary bulb in its spring holder. If above checks okay, replace hi-limit thermostat.
	Air Pressure Switch	Check for voltage on both sides of the switch, if voltage is present on one side only, check for air tube blockage, adjust air switch, if above fails, replace switch.
	Heating Element Relay	Check for voltage to the Relay coil and contacts. If voltage is present and contactor will not activate, replace the contactor. Check for voltage across relay terminals.
	Heater Element	Check the amperage draw on each hot leg for proper load. Check the rating plate for rating information. If amp draw is low or high, check element for opens and shorts.

Conveyor will not run S/N 4000480 and Below	Fan Switch	Check continuity between switch terminals. Replace as needed.
	Conveyor Control Transformer	Check for supply voltage at primary of transformer. If no voltage is present, trace wiring back to fan switch. Check for 24VAC at transformer secondary. If no voltage is present, replace transformer.
	Speed Adjustment Potentiometer	This is a 5K ohm potentiometer. WITH POWER OFF: Remove the leads from the motor control board at terminals P1, P2, P3. With a digital meter, check the ohm reading across the red and black leads. This reading should be 5K ohms (± 10%) as the pot. is rotated from low to high. Place meter leads on red and white lead. Rotating the pot. slowly from low to high, the meter reading should show an even transition from 0 to 5K ohms (± 10%). There should be no dead or open spots throughout the rotation of the pot. Check all three (3) leads to ground. There should be no continuity to ground. If any of the above checks fail, replace the pot.
	Conveyor Control Board	Check for 24 VAC input to conveyor control. If no voltage is present, trace wiring back to transformer. If voltage is present at L1 and L2, check for D.C. output at terminals A+ and A-. If there is AC voltage input, but no D.C. voltage output, replace conveyor control board.
	Conveyor Gear Motor	If there is D.C. voltage output from the conveyor control, but the motor does not run, check the mini-breaker (0.7 Amp). Check motor leads for opens, shorts or continuity to ground. If motor fails above test, replace motor.
	Conveyor	Check conveyor drive coupling to be sure that it is tight. Also check to see that coupling is engaged with conveyor drive shaft. Check for any mechanical misalignment or improper adjustment, also check for worn bearings. A conveyor belt that is too tight will cause excessive bearing wear and sometimes-irregular speed.
Conveyor speed varying or intermittent	Power Supply	Check for steady supply voltage to oven. If voltage is unsteady, contact power company.
	Transformer	Check for steady A.C. voltage output from transformer and replace as needed.
	Conveyor Control	Check for steady D.C. voltage output from conveyor control. If D.C. voltage output is unsteady, check conveyor potentiometer (see "Speed Adjustment Potentiometer" under Conveyor will not run). If the potentiometer checks good, and the D.C. voltage is unsteady, replace conveyor control.
	D.C. Gearmotor	Check motor brushes for excessive arching and/or unusual wear. Replace brushes or gearmotor as needed.

Conveyor will not run (S/N 3000481 & Above)	Fan Switch	WITH POWER OFF: Check continuity between switch terminals. Check and insure good wire connections.
	Conveyor Control Transformer	With the fan switch on, check for supply voltage at the primary of the transformer. Check for voltage on the secondary side of transformer (24 VAC) at J4 and J5 on the conveyor control board. Replace as needed.
	Speed Adjustment Pot	This is a 50 K ohm potentiometer. WITH POWER OFF: Remove the leads from the motor control board at terminals P1, P2, P3. With a digital meter, check the ohm reading across the red and black leads. This reading should be 50K ohms (± 10%) as the pot. is rotated from low to high. Place meter leads on red and white lead. Rotating the pot. slowly from low to high, the meter reading should show an even transition from 0 to 50 K ohms (±10%). There should be no dead or opens spots throughout the rotation of the pot. Check all three (3) leads to ground. There should be no continuity to ground. If any of the above checks fail, replace the pot.
	Conveyor Control Board	Check for 24 VAC input to the control board at terminals J4 and J5. If not present, check wiring back to control transformer, if voltage is present at J4 and J5, check the VDC output at terminals J2 (+) & J3 (-) (0-18 VDC). If 24 VAC is present at J4 and J5, but VDC is not present at J2(+) & J3(-) replace board.
	Conveyor Gear Motor	If D.C. voltage is present at J2(+) and J3(-) and the motor does not run, first check the mini breaker (.7Amp). Check the leads to the motor for evidence of any shorts or opens, and each lead to ground. If the motor fails the above tests, replace motor.
	Conveyor	Check for any mechanical misalignment or improper adjustment, also check for worn bearings. A conveyor belt that is too tight will cause excessive bearing wear and sometimes, irregular speed.
Conveyor speed varying or intermittent	Power Supply	Check for steady supply voltage to oven. If voltage is unsteady, contact Power Company.
	Transformer	Check for steady AC voltage output from transformer and replace as needed.
	Conveyor Control	Check for steady D.C. voltage output from conveyor control. If D.C. voltage output is unsteady, check conveyor potentiometer (See Speed Adjustment Potentiometer" under Conveyor will not run). If the potentiometer checks good, and the D.C. voltage is unsteady, replace conveyor control.
	D.C. Gearmotor	Check motor brushes for excessive arching and/or unusual wear. Replace brushes or gearmotor as needed
	Magnet	Check to insure that the magnet (cemented to shaft of conveyor drive motor) has not been damaged, or come loose from motor shaft. Replace as needed.
	Hall Effect Sensor	Check for any physical damage to Hall Effect Sensor (mounted on conveyor motor). Check all wiring and connections or damage. Check all connections for tightness or proper location and check all wiring or visible damage. Replace as needed.

REMOVAL, INSTALLATION, AND ADJUSTMENT

MODEL SERIES 1300

CAUTION!

BEFORE REMOVING OR INSTALLING ANY COMPONENT IN THE IMPINGER OVEN BE SURE TO DISCONNECT ELECTRICAL POWER SUPPLY

SWITCH, ON-OFF

1. Remove conveyor and oven side panels.
2. Remove two (2) screws from ends of control panel and remove panel.
3. Disconnect four (4) wires from switch assembly. Mark wires for reinstallation.
4. Depress clips on side of switch and remove from panel.
5. Reassemble in reverse order and check operation.

POTENTIOMETER, CONVEYOR CONTROL

1. Remove conveyor and oven side panels.
2. Remove two (2) screws from ends of control panel and remove panel.
3. Unplug potentiometer at the wire harness (push on connectors).
4. Loosen set screws on control knob and remove knob.
5. Remove retaining nut from potentiometer shaft and remove pot.
6. Reassemble in reverse order and check operation, recalibrate if needed.

POTENTIOMETER, TEMPERATURE CONTROL

1. Remove conveyor and oven side panels.
2. Remove two (2) screws from ends of control panel and remove panel.
3. Unplug potentiometer at the wire harness (push on connectors).
4. Loosen set screws on control knob and remove knob.
5. Remove retaining nut from potentiometer shaft and remove pot.
6. Reassemble in reverse order and check operation, recalibrate if needed.

CIRCUIT BREAKER, 0.7 AMP

1. Remove control box cover.
2. Remove two (2) wires from mini-breaker.
3. Remove knurled nut and remove breaker.
4. Reassemble in reverse order and check operation.

FUSE HOLDER

1. Remove control box cover.
2. Remove two (2) wires from fuse holder.
3. Remove two (2) screws and remove holder.
4. Reassemble in reverse order and check operation.

THERMOSTAT, OVEN CAVITY HI-LIMIT

1. Remove control box cover.
2. Remove oven back assembly. (See OVEN BACK)
3. Remove two (2) wires from thermostat.
4. Remove retaining nut from the front of thermostat and remove thermostat.
5. Remove capillary tube from wire form in back of oven and remove assembly out through control box side.
6. Reassemble in reverse order. Check for proper routing through insulation. Be sure capillary tube is held securely in the wire form and the reset button has been pushed in and set.
   NOTE: All excess capillary tubing should be brought back into control box area. Be certain to replace insulation seal when oven back is re-installed.
7. Check operation.

AIR PRESSURE SWITCH - REPLACEMENT

1. Remove control box cover.
2. Remove two (2) wires.
3. Remove air tube (note location).
4. Remove four (4) screws and replace air switch.
5. Reassemble in reverse order and check operation.
   NOTE: Make sure to use rubber grommets when installing air switch.

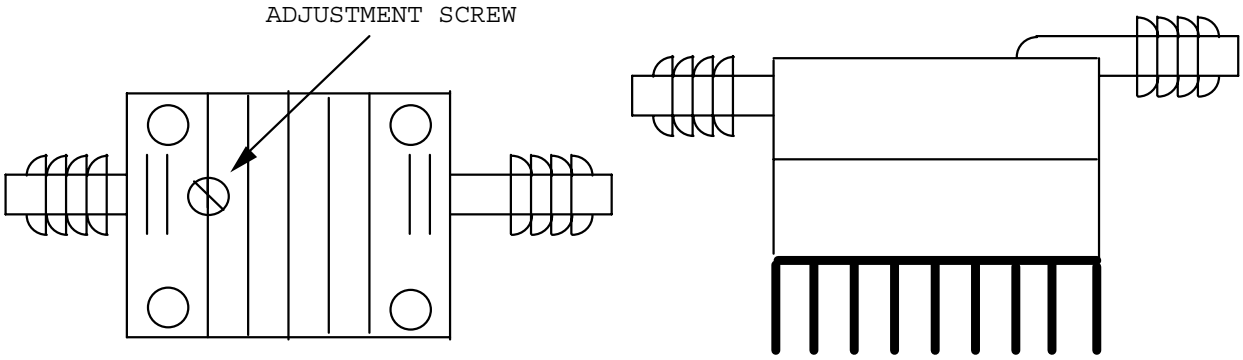

AIR PRESSURE SWITCH - ADJUSTMENT

1. Apply power to oven, turn temperature control potentiometer to max. and allow 30-minutes preheat for temperatures to stabilize.
2. Remove air tube and with a volt meter verify that contactor for heater elements opens.
3. WITH POWER ON: Re-connect tube and check voltage across the air switch making sure that there is no voltage drop and it remains steady. Adjust as needed. (See Picture, verify adjustment screw has not vibrated out).
   NOTE: Allow 30 minutes preheat.

THERMOSTAT, CONTROL BOX HI-LIMIT

1. Remove control box cover.
2. Remove two (2) wires.
3. Remove two (2) screws and replace
4. Reassemble in reverse order and check operation.
   NOTE: Make sure reset button has been pushed and set.

MAIN FAN RELAY

1. Remove control box cover
2. Remove wires from relay and mark wires for reinstallation.
3. Remove two (2) screws and replace relay.
4. Reassemble in reverse order and check operation.

TIME DELAY RELAY

1. Remove control box cover.
2. Remove wires from relay and mark wires for reinstallation. CAUTION: Resistor should be jumpered across terminals #2 and #3 on some of the early models (SN 3000352 and below) this jumper was installed across terminals #1 and #3 which may cause failure of the timer. Correct when replacing timer.
3. Remove screw and replace relay.
4. Reassemble in reverse order and check operation.
   NOTE: Do not overtighten mounting screw as this could damage timer.

RELAY CONTACTOR

1. Remove control box cover.
2. Remove wires and mark wires for reinstallation.
3. Remove four (4) mounting screws and replace contactor.
4. Reassemble in reverse order and check operation.

TRANSFORMER - CONVEYOR

1. Remove control box cover.
2. Disconnect wires from primary and secondary of transformer. Mark wires for reinstallation (#23-blue-208V connection/#24-red-240V connection).
   NOTE: Wire nut one not being used.
3. Remove two (2) mounting screws and replace.
4. Reassemble in reverse order and check operation.

CONVEYOR DRIVE MOTOR

1. Remove conveyor (see Installation and Operations Manual).
2. Remove screw from center of coupling sleeve assemby. and slide coupling assembly off motor shaft.
3. Remove control box cover.
4. Disconnect motor leads and mark wires for reinstallation and conveyor direction.
5. Remove four (4) motor mounting screws and replace motor.
6. Reassemble in reverse order and check operation.
   NOTE: Check to insure coupling and conveyor shaft are aligned.
   NOTE: Starting with SN 3000481 all conveyor drives will be a closed loop system. The drive motor assembly will include a hall effect sensor board and magnet. No calibration required.

S/N 3000480 and Below--Check calibration of conveyor control board (See "Conveyor control board calibration")

S/N 3000481 and Above--Attach correct magnet to conveyor motor assembly.

ASSEMBLY OF MAGNET TO MOTOR

FOR OVENS WITH 1-12 MINUTE CONVEYOR DRIVE SYSTEM

1. Apply 1 or 2 drops of adhesive (supplied) to magnet. Mount magnet on motor shaft. Be sure to keep adhesive away from motor bearings.
   Note: Use magnet marked "8"

FOR OVENS WITH 1-24 MINUTE CONVEYOR DRIVE SYSTEM

1. Apply 1 or 2 drops of adhesive (supplied) to magnet. Mount magnet on motor shaft. Be sure to keep adhesive away from motor bearing.
   Note: Use magnet marked "16"

CONVEYOR CONTROL BOARD - REPLACEMENT

1. Remove control box cover.
2. Disconnect and mark all wires from the control board.
3. Remove two (2) screws from mounting bracket at rear wall and remove assembly.
4. Depress nylon clips and remove circuit board from mounting bracket.
5. Reassemble in reverse order and check operation.

CONVEYOR CONTROL BOARD CALIBRATION (S/N 3000480 AND BELOW)

(NOTE: S/N 3000481 & ABOVE, NO CALIBRATION REQUIRED)

1. Remove control box cover.
2. Connect digital meter to A+ & A-.
3. With conveyor running at maximum speed, adjust max pot on board to 21.5 to 22 VDC.
4. With conveyor running at minimum speed, adjust min pot on board to 3 to 4 VDC.
5. Check conveyor belt timing (leading edge in to leading edge out) at 5 min. and adjust, potentiometer knob if necessary to compensate (S/N 3000481 & above, no calibration required).

ELECTRONIC TEMPERATURE CONTROL BOARD - REPLACEMENT

1. Remove control box cover.
2. Disconnect wires and molded connector and mark wires for reinstallation.
3. Remove two (2) screws from mounting bracket and remove assembly.
4. Depress nylon clips and remove circuit board from mounting bracket.
5. Reassemble in reverse order and check operation.

ELECTRONIC TEMPERATURE CONTROL - CALIBRATION

1. Turn oven on, allow 30 minutes preheat for temperatures to stabilize in oven cavity.
2. Remove control box cover.
3. Place temperature probe in <u>bottom</u> finger #4 (lower right), 3rd row from outside edge, 3rd hole from the <u>rear</u>.
   NOTE: Make sure probe is not touching any metal surfaces. (Measure air temperature only)
4. Turn temperature control knob fully clockwise and adjust so the knob indicator is aligned with the mark <u>past</u> 550°F (288°C) on the dial. (See diagram Pg. 13)

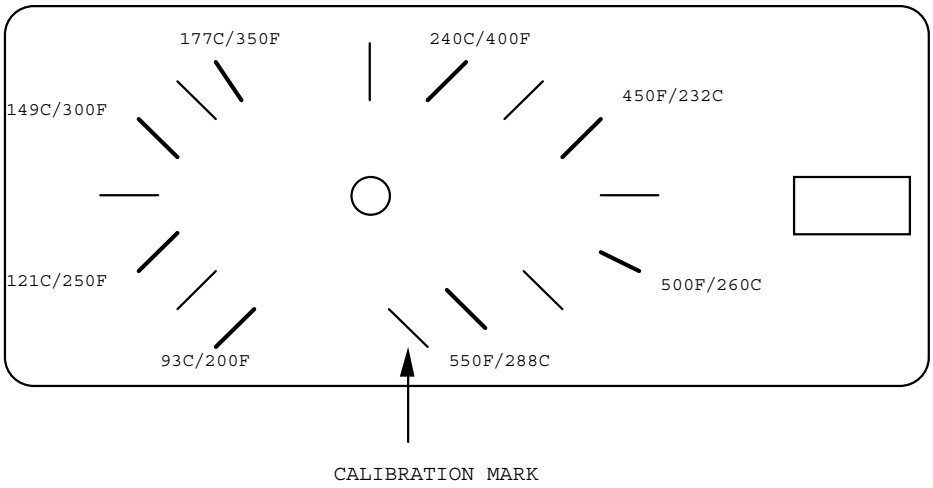

5. Turn the temperature control knob to 500°F (260°C) and calibrate the temperature control board. Adjust the top potentiometer only (see diagram Pg. D5) so the unit cycles at 500°F ± 10°F (490°F - 510°F).
6. Turn the temperature control knob to 550°F and verify that the oven will cycle at 550°F (288°C) ± 10°F.
7. Replace the control box cover and check operation.

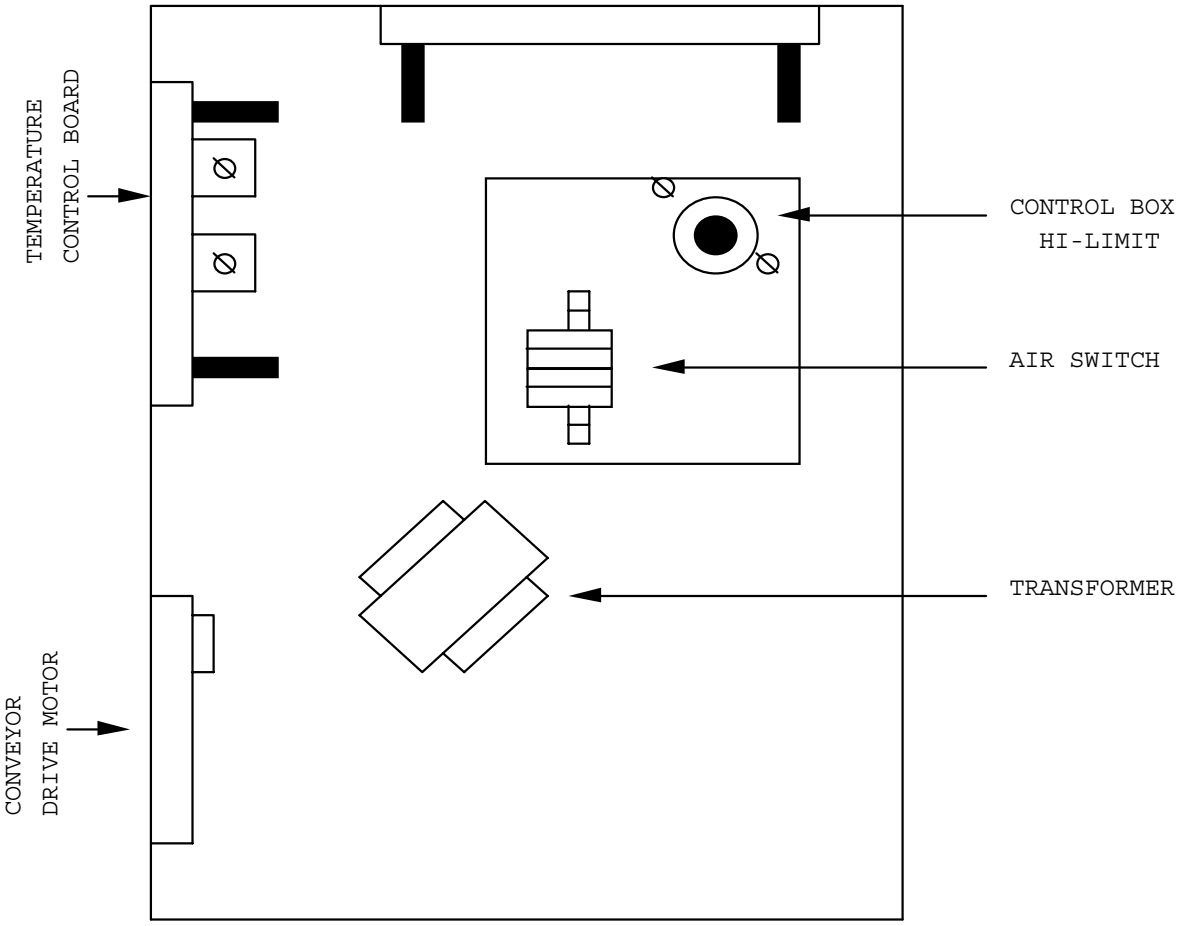

COOLING FAN, CONTROL BOX

1. Remove control box cover.
2. Remove four (4) screws.
3. Lift off fan guard and finger guard.
4. Disconnect two wires and replace fan.
5. Reassemble in reverse order and check operation.
   NOTE: Check to insure that control box high limit switch is not tripped. Reset if needed.

CAPACITOR, MOTOR

1. Remove six (6) acorn nuts from motor cover and remove.
   CAUTION: DISCHARGE CAPACITOR BEFORE REMOVING.
2. Remove wires from capacitor and mark wires for reinstallation.
3. Loosen clamp around capacitor and remove.
4. Reinstall in reverse order and check operation.

OVEN BACK ASSEMBLY

1. Remove six (6) acorn nuts and remove motor cover.
2. Disconnect all wiring from motor and heating element.
3. Remove four (4) nuts holding oven back and remove oven back.
4. Reassemble in reverse order. NOTE: Be certain to replace insulation seal each time oven back is removed.

MAIN FAN

1. Remove six (6) acorn nuts holding motor cover and remove.
2. Remove four (4) acorn nuts holding oven back assembly and remove.
3. Loosen two (2) screws on fan hub and slide fan off of motor shaft. (Note location of hub on motor shaft for reinstallation. Approximately 3/16" from back wall.)
4. Reinstall in reverse order and check system operation. Allow 30 minute preheat and verify that fan is not rubbing.
   NOTE: Be certain to replace insulation seal each time oven back is removed.

THERMOCOUPLE

1. Remove control box cover.
2. Remove six (6) acorn nuts holding motor cover and remove.
3. Remove four (4) acorn nuts holding oven back assembly and remove oven back.
4. Remove thermocouple bulb from wire form in rear of oven cavity.
5. Disconnect and mark wires from temperature control board (red=neg., white=pos.) and remove thermocouple.
6. Reassemble in reverse order and check operation. NOTE: Be certain to replace insulation seal each time oven back is removed.

INFORMATION:

When two wires composed of dissimilar metals are joined together and one of the ends is heated, a continuous current flow is generated. We use an iron constant (Type J) thermocouple. The iron wire increases the number of dissimilar junctions in the circuit.

It is possible to check a thermocouple with a properly calibrated D.C. millivolt meter. At 32°F, the millivolt reading should be 0.00. This can be checked by inserting the thermocouple into an ice bath. The millivolt reading at 72°F should be 1.134.

When using the following chart, the temperature at the terminal connections must be noted. This temperature is called the Junction Temperature.

The following chart lists the thermocouple millivolt readings from 200°F to 600°F.

	OVEN TEMPERATURE										
JUNCTION TEMPERATURE	200°F	250°F	300°F	325°F	350°F	400°F	425°F	450°F	500°F	550°F	600°F
90°F	3.26	4.77	6.30	7.06	7.83	9.37	10.14	10.91	12.46	14.00	15.53
88°F	3.32	4.83	6.36	7.12	7.89	9.43	10.20	10.97	12.51	14.05	15.59
86°F	3.37	4.88	6.41	7.17	7.94	9.49	10.26	11.03	12.57	14.11	15.65
84°F	3.43	4.94	6.47	7.23	8.00	9.54	10.31	11.09	12.63	14.19	15.71
82°F	3.49	5.00	6.53	7.29	8.06	9.60	10.37	11.14	12.69	14.23	15.76
80°F	3.55	5.06	6.59	7.35	8.12	9.66	10.43	11.20	12.74	14.28	15.82
78°F	3.60	5.11	6.64	7.40	8.17	9.72	10.49	11.26	12.80	14.34	15.86
76°F	3.66	5.17	6.70	7.46	8.23	9.77	10.55	11.32	12.86	14.40	15.94
75°F	3.69	5.20	6.73	7.49	5.26	9.80	10.57	11.35	12.89	14.43	15.97
74°F	3.72	5.23	6.76	7.52	8.29	9.83	10.60	11.37	12.92	14.46	15.99
72°F	3.78	5.29	6.82	7.58	8.35	9.89	10.66	11.43	12.97	14.51	16.05
70°F	3.83	5.34	6.87	7.63	8.40	9.95	10.72	11.49	13.03	14.57	16.11
68°F	3.89	5.40	6.93	7.69	8.46	10.00	10.78	11.55	13.09	14.63	16.17
66°F	3.95	5.46	6.99	7.75	8.52	10.06	10.83	11.61	13.15	14.69	16.23
64°F	4.01	5.52	7.05	7.81	8.58	10.12	10.89	11.66	13.20	14.74	16.28
62°F	4.06	5.57	7.10	7.86	8.63	10.18	10.95	11.72	13.26	14.80	16.34
60°F	4.12	5.63	7.16	7.92	8.69	10.24	11.01	11.78	13.32	14.86	16.40

HEATING ELEMENT (Color Coded on the Cold Zone)

PART# 369418	Heating Element 208V	Red
PART# 369419	Heating Element 240V	Blue
PART# 369450	Heating Element 220V	Yellow
PART# 369455	Heating Element 200V	Orange
PART# 369456	Heating Element 380V	Violet
PART# 369457	Heating Element 415V	Green
PART# 369475	Heating Element 200V 3 PH	Orange
PART# 369476	Heating Element 380V 3 PH	Violet
PART# 369477	Heating Element 415V 3 PH	Green
PART# 370104	Heating Element 400V 3 PH	Brown
PART# 370105	Heating Element 400V 1 PH	Brown

1. Remove six (6) acorn nuts holding motor cover and remove
2. Remove connectors from element.
3. Remove four (4) acorn nuts holding oven back assembly and remove.
4. Remove three (3) screws from heating element brackets and slide element out of back assembly.
5. Reassemble in reverse order. Verify by color code, dot or band on element that correct element is being installed. Refer to chart above:
   NOTE: Be certain to replace insulation seal each time oven back is removed.

AIR PUMP

1. Remove six (6) acorn nuts holding motor cover and remove.
2. Disconnect motor, capacitor, and element leads and mark wires for reinstallation.
3. Remove four (4) acorn nuts holding oven back assembly and remove.
4. Remove main fan. (Note location, approximately 3/16" from back wall on motor shaft.)
5. Remove heating element.
6. Remove five (5) screws from inner back assembly and lift off.
7. Loosen two screws on air pump hub and slide off shaft. (Note location for reinstallation (approximately 3/64" clearance from back wall).
8. Reinstall in reverse order and check operation. Allow 30 minute preheat and verify that fan is not rubbing.
   NOTE: Be certain to replace insulation seal each time oven back is removed.

MAIN FAN MOTOR

1. Remove six (6) acorn nuts holding motor cover and remove.
2. Disconnect motor, capacitor, and heating element and mark wires for reassembly.
3. Remove four (4) acorn nuts holding oven back assembly and remove.
4. Remove heating element (See "heating element removal").
5. Remove main fan, NOTE position ("See fan removal").
6. Remove five (5) screws from inner back and separate.
7. Remove air pump assembly
   NOTE location.
8. Remove four (4) screws from motor mount pedestal and lift motor and pedestal off outer back assembly.
9. Remove four (4) nuts from front motor studs and remove mounting pedestal.
10. Reassemble in reverse order and check operation.
    NOTE: Be certain to replace insulation seal each time oven back is removed

GENERAL – 1300 SERIES

LETTER	P/N	DESCRIPTION
A	369434	Air Duct Panel, Upper
B	369442	Finger Housing S/N 3002167 & Below
C	369436	Columnating Plate #2 (UR) – S/N 3002167 & Below
D	369445	Finger Cover, Upper Right – S/N 3002167 & Below
E	369441	Finger Cover, Lower Right – S/N 3002167 & Below
F	369439	Columnating Plate #4 (LR) – S/N 3002167 & Below
G	369435	Air Duct Panel, Lower
H	369438	Columnating Plate #3 (LL) – S/N 3002167 & Below
I	369444	Finger Cover, Lower Left – S/N 3002167 & Below
J	369446	Finger Cover, Upper Left – S/N 3002167 & Below
K	369437	Columnating Plate #1 (UL) – S/N 3002167 & Below
L	369916	Top / Front Cover Panel
M	369484	Cover Panel Assy
N	369407	Fastener & Split Ring Retainer
O	369447	Cover Panel Assembly, Right
P	369953	Flat Washer, S/S
Q	369460	Compression Spring
R	369410	Coupling Sleeve
S	370106	Flat Washer, .156 x .430
T	350259	Screw, THMS 6-32 x 3/8
U	369413	Drive Key
V	369373	Receptacle, Snap-In
W	369461	Leg, 4”
X	369945	Control Panel
Y	369429	Knob, Control
Z	369432	Switch, On – Off
AA	369449	Temperature Control Pot. Assembly
BB	369433	Potentiometer Control, Conveyor S/N 3000480 & Below
	369468	Potentiometer Control, Conveyor S/N 3000481 & Above
CC	350224	Lens, Yellow
DD	369448	Cover Panel Assembly, Left
EE	369467	Pilot Light & Harness – S/N 3000481 & Above
FF	369495	Conveyor Baffle
GG	369211	Thumb Screw
HH	369451	Mounting Ring Assy.
JJ	369491	Finger Cover – S/N 3002168 & Above (4 required)
KK	369490	Columnating Plate – S/n 3002168 & Above (4 required)
LL	369488	Finger housing – S/n 3002168 & Above (4 required)
MM	369932	Facia 1-12 Minute Bake Time
	370096	Facia 2-24 Minute Bake Time
	370018	Facia 1-24 Minute Bake Time
NN	370095	Control Guard
OO	370097	Screw 10-32 x ¼”

GENERAL – 1300 SERIES PARTS BLOW-UP

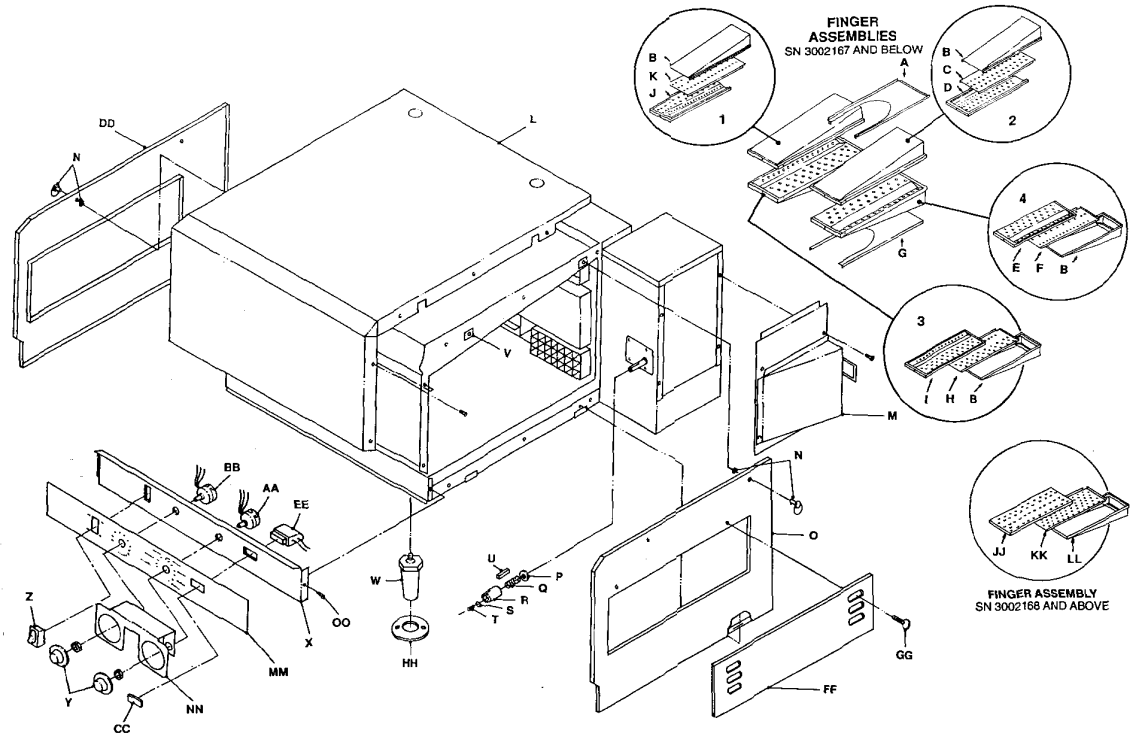

CONTROL COMPARTMENT – 1300 SERIES

LETTER	P/N	DESCRIPTION
A	369426	Cooling Fan – S/N 3000399 & Below
	369378	Cooling Fan – S/N 3000400 & Above
B	369428	Finger Guard – S/N 3000399 & Below
	369331	Finger Guard – S/N 3000400 & Above
C	369415	Conveyor Control S/N 3000480 & Below
	369464	Conveyor Control – S/N 3000481 to 3007663
		Except Models 1301-5, 1302-5, 1304-5, 1308-5
	370017	Conveyor Control S/N 3007664 and Above and
		All S/N for Models 1301-5, 1302-5, 1304-5, 1308-5
D	369431	Thermostat, Control Box Hi-Limit S/n 3000352 & Above
E	369430	Air Switch
F	369422	Relay SPST, 240V
G	369417	Time Delay Relay
H	369425	Relay Contactor Single Phase
	369479	Relay Contactor 3 Pole 3 Phase
I	369427	Transformer, Conveyor Control
	370241	Transformer, Conveyor Control Models 1312,1313,1314
J	369416	Electronic Temperature Control S/N 3000480 & Below
	369465	Electronic Temperature Control S/N 3000481 & Above
K	369129	Fuse Holder, Model 1300,1301,1302,1307
L	369424	Conveyor Drive Motor S/N 3000480 & Below
	369923	Conveyor Motor Assy. Models 1301-5,1302-5,1304-5,1308-5
	369466	Conveyor Motor Assy (Assy. Includes Q,R)
		S/N 3000481 & Above Except 1301-5,1302-5,1304-5,1308-5
	369841	Brushes (For 369466 Motor)
M	369154	Circuit Breaker - .7Amp
N	357067	Thermostat, Capillary
O	369483	Housing Assy.
P	369482	Fan Housing
Q	369822	Magnet, 8 Pole (For 1-12 Minute Conveyor System)
	370065	Magnet, 16 Pole (For 1-24 Minute Conveyor System)
R	369823	Hall Effect Sensor
S	369421	Fuse 5A, Model 1300,1301,1302,1307
T	370100	Conveyor Motor Plate, Inner
U	370040	Hall Effect Cable
V	370099	Conveyor Motor Plate, Outer
W	369414	Power Cord 30A S/n 3007818 & Below (Model 1301,1302)
	370019	Power Cord 50A S/N 3007819 & Above (Model 1301,1302)
X	369536	Cooling Fan Cordset
Y	369085	Junction Box
Z	369376	Terminal Block 3 Pole
	369584	Terminal Block 4 Pole
AA	369698	Cover, Junction Box
BB	369856	Stand-off, Support
CC	357107	Fuseholder
DD	369492	Fuse 5A
EE	369131	Thermocouple

CONTROL COMPARTMENT – 1300 SERIES BLOW - UP

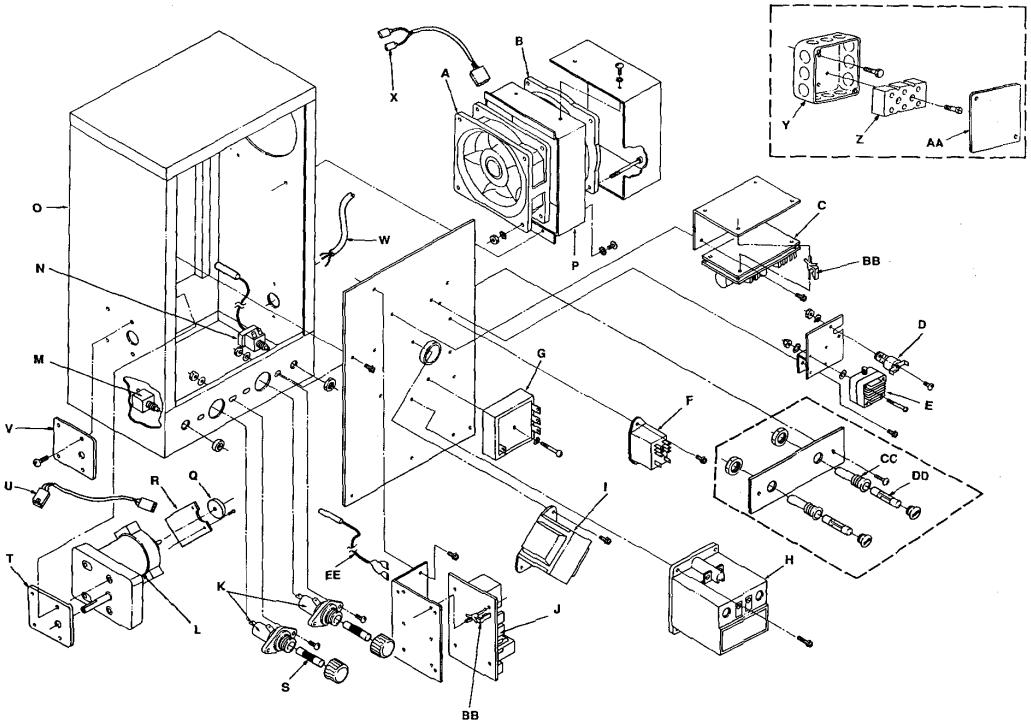

BACK – 1300 SERIES

LETTER	P/N	DESCRIPTION	
			Color Coded on The Cold Zone
A	369418	Heating Element - 208V	Red
	369419	Heating Element - 240V	Blue
	369450	Heating Element - 220V	Yellow
	369455	Heating Element - 200V	Orange
	369456	Heating Element - 380V	Violet
	370105	Heating Element - 400V 1 PH	Brown
	369457	Heating Element - 415V	Green
	369475	Heating Element - 200V 3 PH	Orange
	369476	Heating Element - 380V 3 PH	Violet
	370104	Heating Element - 400V 3 PH	Brown
	369477	Heating Element - 415V 3 PH	Green
B	369409	Main Fan	
C	369408	Air Pump	
D	369440	Nut, S/S ¼ - 20	
E	369192	Capacitor	
F	369457	Nut, 10-32	
G	370041	Duct Assy	
H	370020	Motor Cover Assy	
I	370102	Bottom Cap, Flue Duct	
J	369453	Flue Duct Assembly	
K	369423	Motor, Main Fan S/N 3002137 & Below – All 1301-4,1302-4	
	369485	Motor, Main Fan 60 Hz S/N 3002168 & Above	
	370179	Motor, Main Fan 50 Hz – Models 1304-4,1305-4,1308-4	
	369480	Motor, Main Fan 50 Hz S/n 3002168 & Above	
L	369940	Motor Mount	
M	370093	Motor Plate Assy	
N	369474	Insulation, Air Pump Panel	
O	369936	Plenum Barrier Panel	
P	369473	Insulation, Plenum Panel	
Q	369935	Cover Plate, Plenum	
R	369470	Insulation Seal	
S	369497	Bracket, Thermostat, Left Side	
T	369496	Bracket, Thermostat, Right Side	
U	369459	Motor Cover Assy	

BACK – 1300 SERIES BLOW - UP

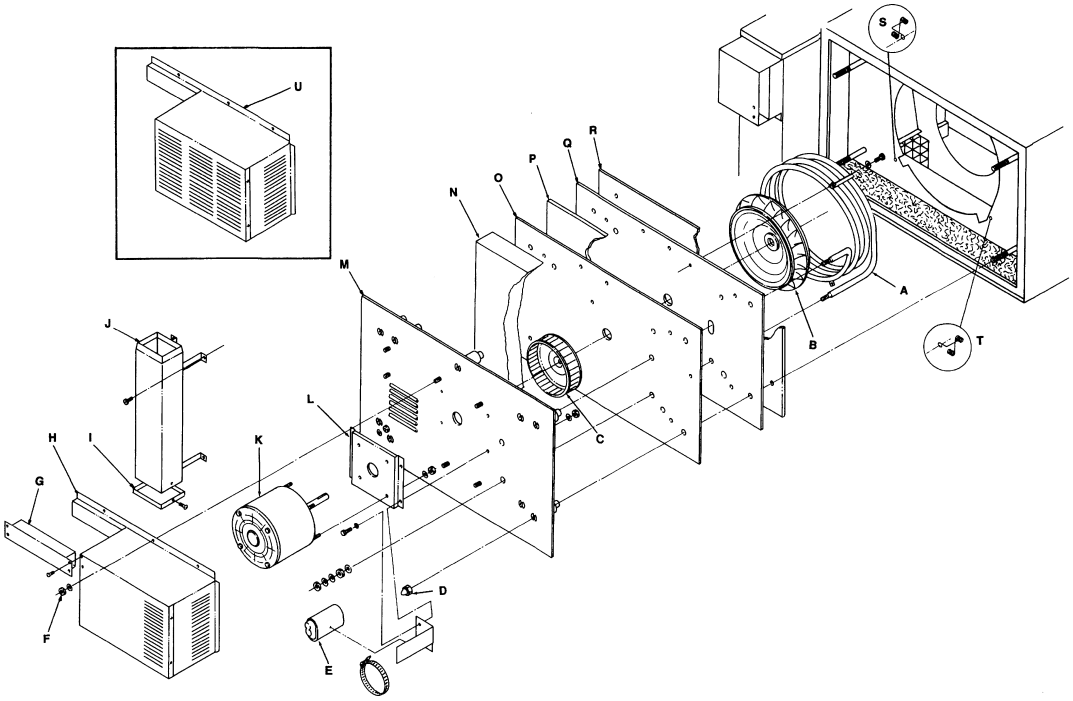

STANDARD CONVEYOR – 1300 SERIES

LETTER	P/N	DESCRIPTION
	369443	Standard Complete Conveyor Assy. (31” Length)
A	369462	Idler Axle
B	369515	Drive Sprocket
C	369516	Conveyor Bearing
D	369463	Drive Axle
E	369471	Roll Pin, 5/32 x 7/8”
F	1343	Entry Shelf – 12”
	1344	Entry Shelf – 4”
G	369412	Conveyor Splice Clip
H	369411	Conveyor Belting
	370185	Conveyor Belting (1 foot section)
I	1341	Exit Shelf – 12”
	1342	Exit Shelf – 4”
J	370094	Conveyor Frame Assembly

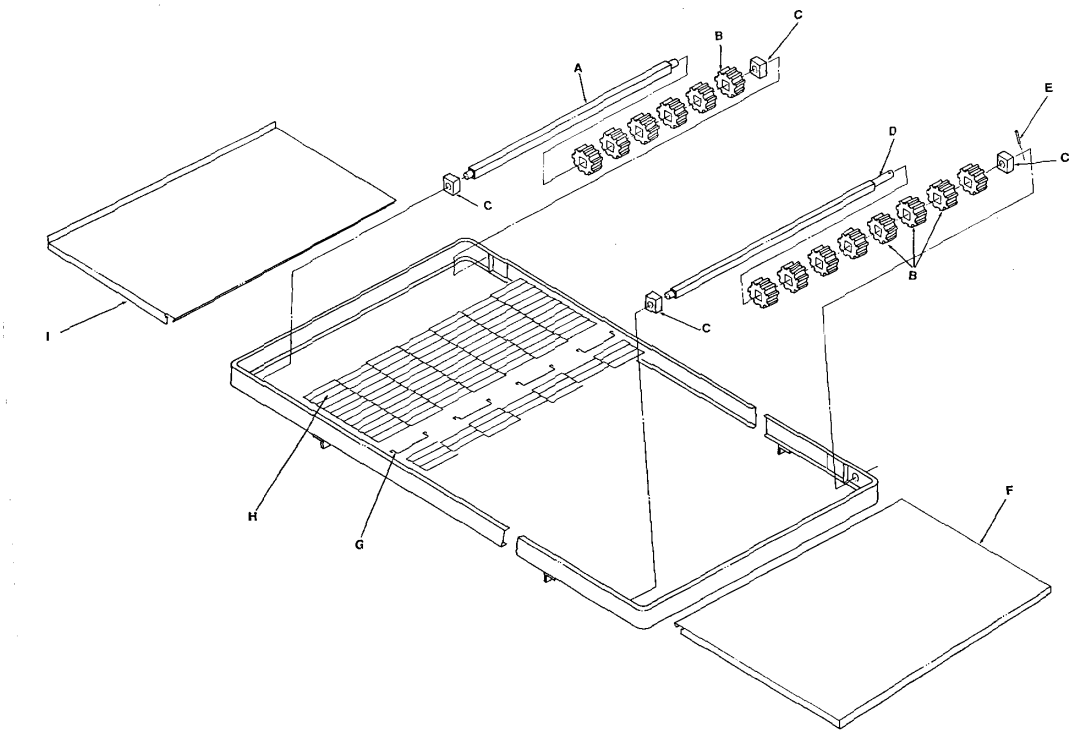

EXTENDED CONVEYOR – 1300 SERIES

LETTER	P/N	DESCRIPTION
	369909	Extended Conveyor Assy. (49 ¾” Length)
A	369462	Idler Axle
B	369515	Drive Sprocket
C	369516	Conveyor Bearing
D	369463	Drive Axle
E	369471	Roll Pin, 5/32 x 7/8”
F	369943	Conveyor Frame, Extended
G	369412	Conveyor Splice Clip
H	369481	Conveyor Belting – Extended Conveyor
	370185	Conveyor Belting (1 Foot Section)
I	369920	Retainer
J	369921	Roller, Slider Bed
K	369954	Pop Rivet S/S
L	369922	Support Rod
M	1345	Pan Stop
N	369489	Crumb Pan Assembly